ZTE

ZEIAD TRADING EST.

ZEIAD TRADING EST.

HISTORY:

Zeiad trading was established in 1980 in the city of Al Ain – United Arab Emirates.

Dealing with several sectors such as, governmental, semi-governmental and private, providing materials and specialized in scaffolding systems.

Targeting our clients satisfaction in all aspects of construction field, providing quality that meets the client's expectations.

Accompanied by skilled customer service, understanding the culture and nature of work.

Since we were from the first few companies which started in this field in the market we have dealt with thousands of different companies in the UAE, and participated in numerous projects which are now accomplished.

COMPANY MISSION:

Our mission statement 'relationship & trust' reflects the commitment towards long-term association with our clients. Quality parameters have always been given paramount importance in our business. That is why we give more stress on the quality of the product so that it can be appreciated in the market.

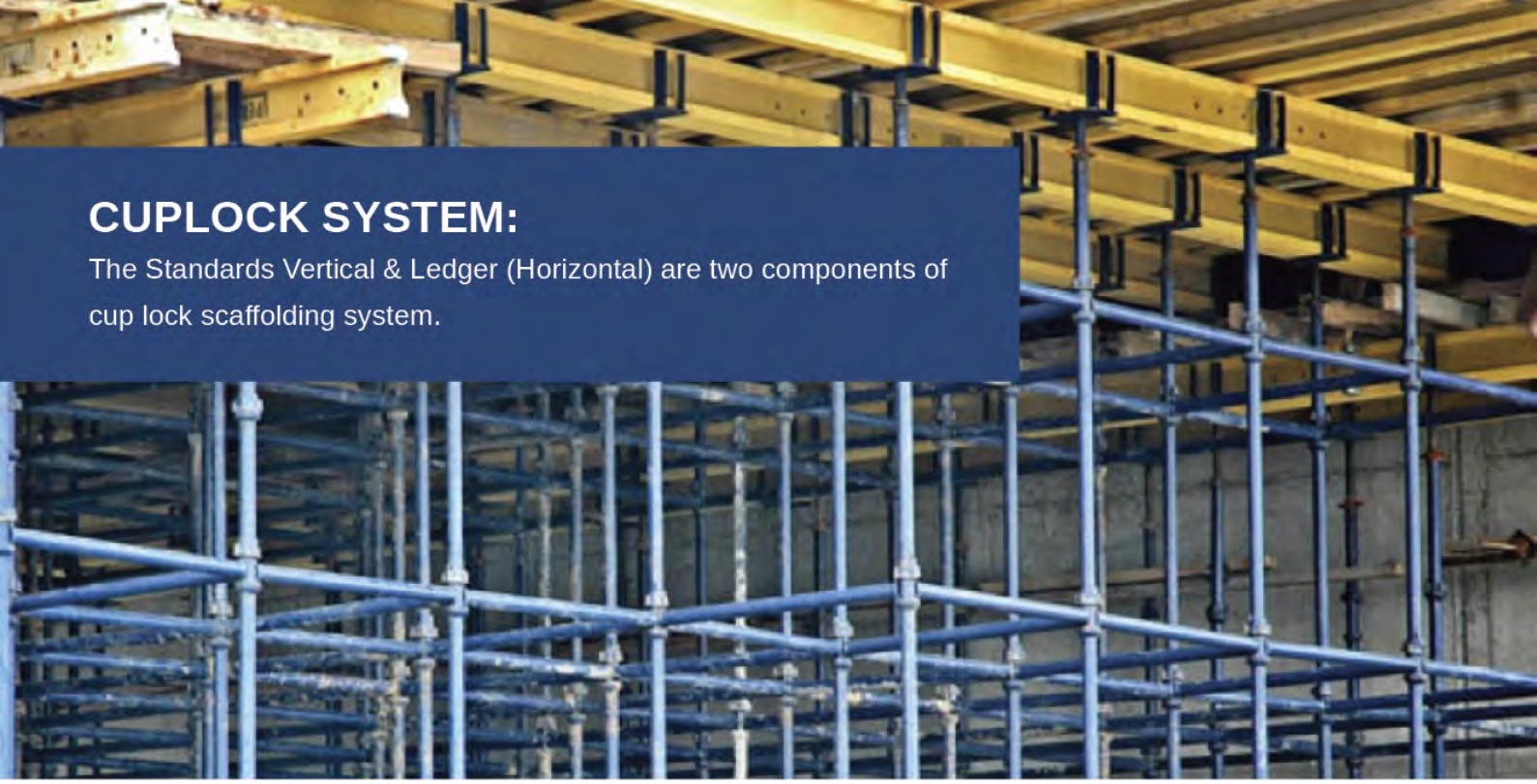

CUPLOCK SYSTEM:

The Standards Vertical & Ledger (Horizontal) are two components of cup lock scaffolding system.

CUPLOCK SYSTEM:

Standard Vertical Pipe:

The standard vertical cup lock pipe are formed by two cups – fixed bottom cup which is welded to the standard vertical pipe while the movable top cup rotated downwards to tightened the horizontal ledger pipe. The forged blade welded at the end of horizontal ledger pipe.

Specifications

Length (mm)	Thickness (mm)	Tube Diameter (mm)
3000 mm	2.80/ 3.0/ 3.2	48
2500 mm	2.80/ 3.0/ 3.2	48
2000 mm	2.80/ 3.0/ 3.2	48
1500 mm	2.80/ 3.0/ 3.2	48
1000 mm	2.80/ 3.0/ 3.2	48

Horizontal Ledger Pipe:

Made up from high grade steel pipe 48 mm diameter. The forged blade welded at the end of horizontal ledger pipe which locate between the top & bottom cup.

Specifications

Length (mm)	Thickness (mm)	Tube Diameter (mm)
2000 mm	2.80/ 3.0/ 3.2	48
1750 mm	2.80/ 3.0/ 3.2	48
1450 mm	2.80/ 3.0/ 3.2	48
1200 mm	2.80/ 3.0/ 3.2	48
950 mm	2.80/ 3.0/ 3.2	48

DECKING BEAM & INFILL BEAM:

Decking Beam is a main beam member of slab formwork decking system. It forming a flat support system together with infill beam, drop head and universal jacks, socket base plate.

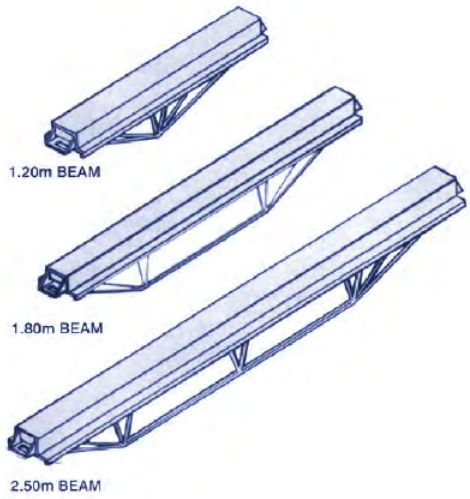

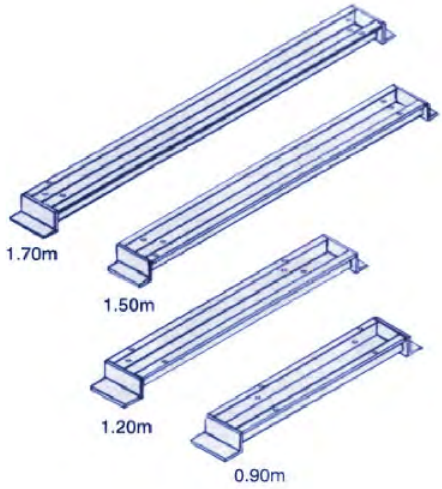

DECKING BEAM

Decking beams are designed with wide top flange giving more support to the plywood,and thereby reducing maintenance costs by extending the life of the plywood. To support a variety of bay sizes with a maximum load on any supporting leg of 40kN The decking beams are available in 2.44m,1.83m,0.91m and 0.61m sizes, but any special size can be construced for a nominal charge.

Weight:

2400mm: 21.9kg

1800mm: 17.4kg

1200mm: 10.0kg

INFILL BEAM

Infill beams are used to provide a transom support underneath the plywood. infill beams are makde from top quality steel which ensures longevity. Covered with plywood allows nail connecting the surface plywood and infill beam anywhere. The safe working load: 40kN UDL All standard sizes are manufactured, but any special sizes can be constructed on request

Weight:

1200mm: 4.0kg

900mm: 3.0kg

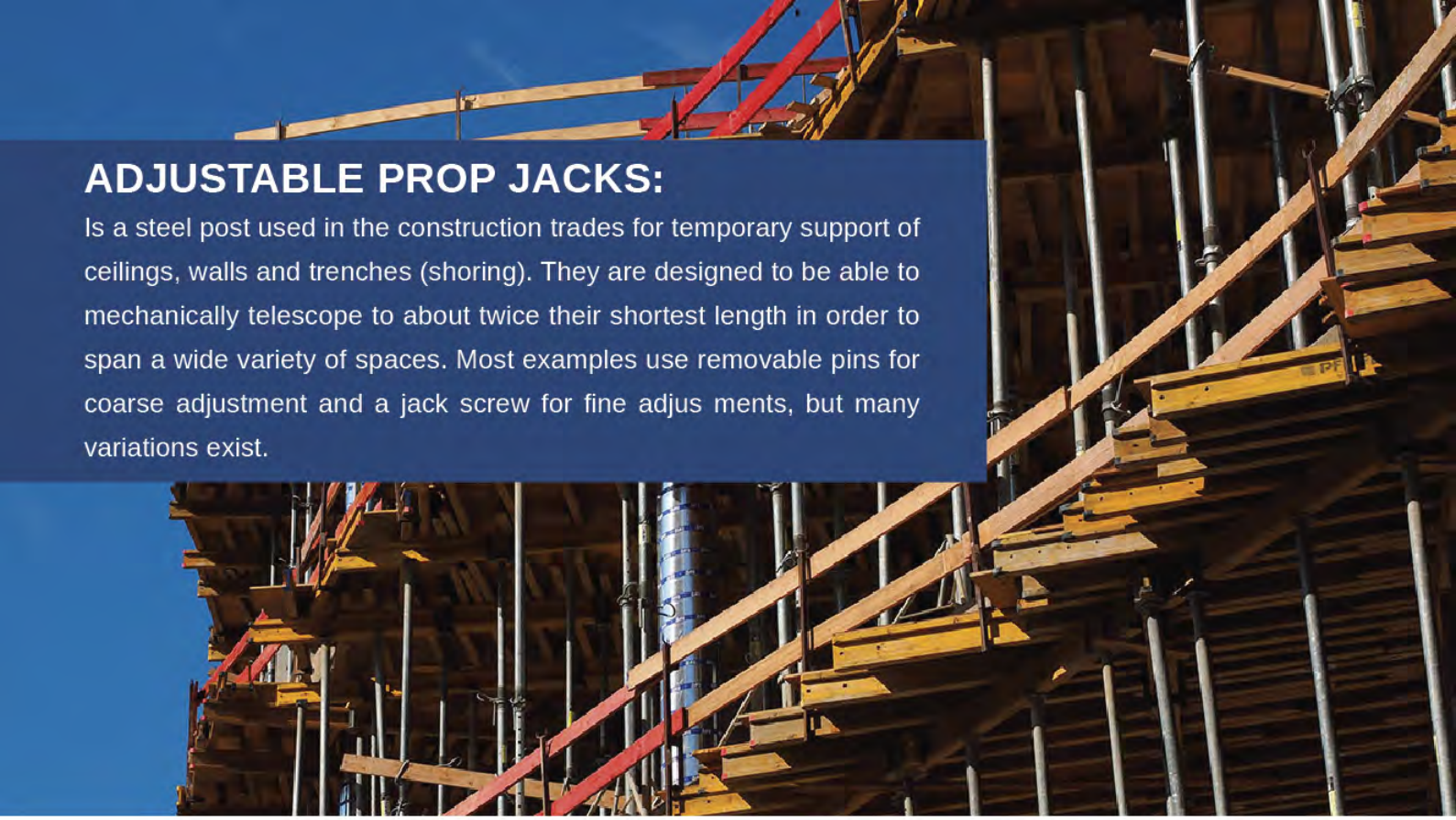

ADJUSTABLE PROP JACKS:

Is a steel post used in the construction trades for temporary support of ceilings, walls and trenches (shoring). They are designed to be able to mechanically telescope to about twice their shortest length in order to span a wide variety of spaces. Most examples use removable pins for coarse adjustment and a jack screw for fine adjus ments, but many variations exist.

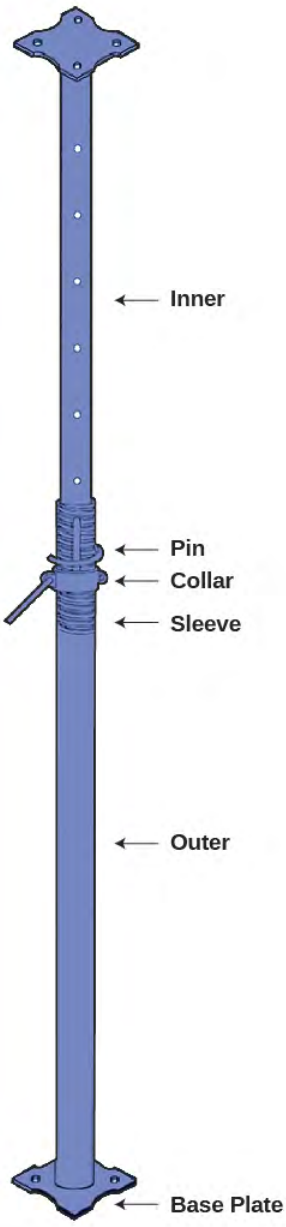

Dimension on Jacks

Size	Minimum Height	Maximum Height	Weight (kg)*
5.0 m	3.00 m	5.00 m	15.8
4.0 m	2.50 m	4.00 m	13.6
3.9 m	2.40 m	3.90 m	13.2
3.5 m	2.00 m	3.50 m	12.5
3.0 m	1.75 m	3.00 m	11.0
2.5 m	1.50 m	2.50 m	9.6

Sleeve
Dia: 50.8mm

Sleeve
Dia: 60.3mm

Casting Nut
Dia: 50.8mm

Casting Nut
Dia: 60.3mm

G Type Pin
Dia: 12.7mm

G Type Pin
Dia: 14.0mm

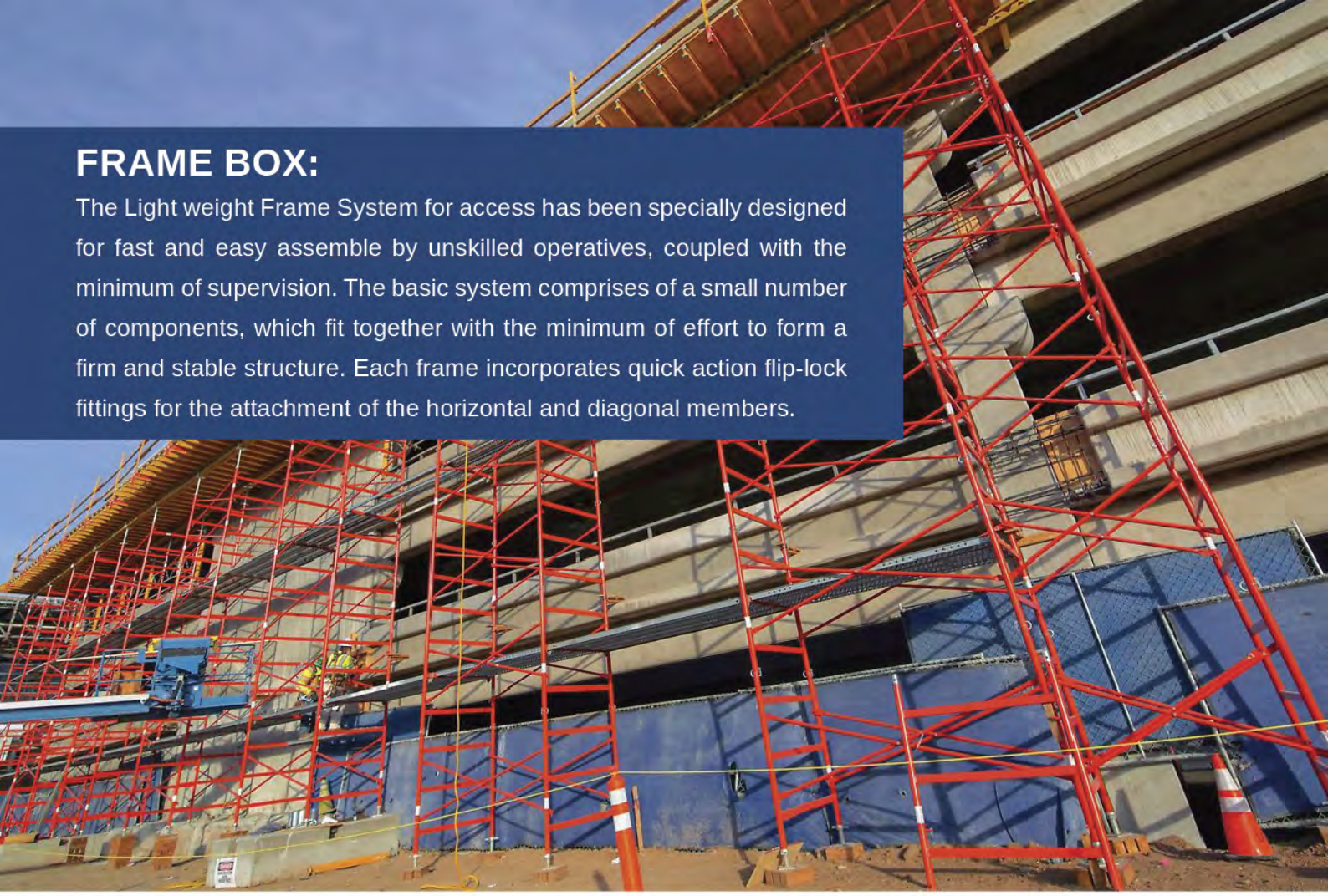

FRAME BOX:

The Light weight Frame System for access has been specially designed for fast and easy assemble by unskilled operatives, coupled with the minimum of supervision. The basic system comprises of a small number of components, which fit together with the minimum of effort to form a firm and stable structure. Each frame incorporates quick action flip-lock fittings for the attachment of the horizontal and diagonal members.

Step Frame Style

Size	Wt.#
5'W x 3'H	24
5'W x 4'H	33
5'W x 5'H	39
5'W x 6'H	45
5'W x 6'4"H	54
5'W x 6'6"H	47

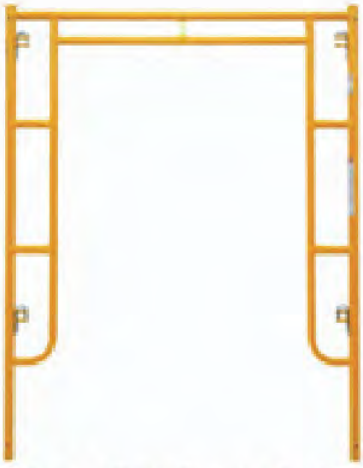

Open End Frame Style

Size	Wt.#
3'W x 6'4"H	42
3'W x 6'6"H	40
5'W x 6'4"H	54
5'W x 6'6"H	50

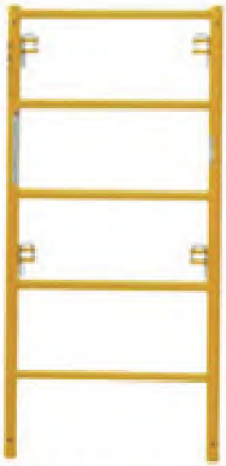

Ladder Frame Style

Size	Wt.#
28"W x 3'H	16
28"W x 4'H	21
28"W x 5'H	26
28"W x 6'H	31

UNIVERSAL AND BASE JACK:

Scaffolding base jack which is the necessary parts in every scaffolding system to adjust the scaffold level whenever the floor base not flat, specialshaped, etc, which provide a good solution for a construction project, bridge, tunnel, civil building, etc. It's widely application in propping system such as construction, plants.

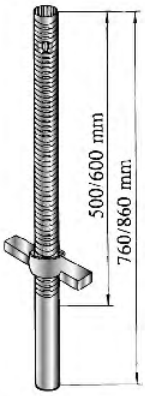

UNIVERSAL

The Universal Screw Jack has an adjustment range. It is manufactured from 3. 8 cm outside diameter steel tube with a rolled square thread for safer operation. The Jack can be used either at the top or the bottom of the vertical standard.

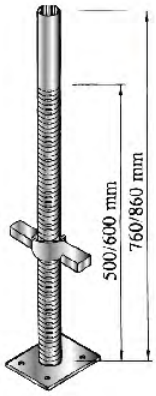

BASE JACK

The adjustable Base Jack is used at the bottom of the Standard to provide an additional maximum adjustment of 500 mm.

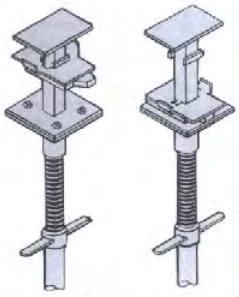

Drophead Raised Drophead Lowered

DROP HEAD

The quick action drophead supplied with nuts and bolts, is designed to fit on standard props or adaptors for One lock scaffolding.

FORK HEAD

For I timber, steel or aluminum beam support. Designed for use with single or double timber. Used with a Universal jack to give height adjustment.

ALUMINUM FRAME:

A scaffold consisting of platforms supported on fabricated end frames with integral posts, horizontal bearers, and intermediate members.

ALUMINUM SCAFFOLDING FRAMES

The aluminum scaffolding frames are joined together by horizontal braces & diagonal braces in horizontal & diagonal positions. On the platform height the platforms are used horizontally over the frames. For high height lower frames are supported from four side by the stabilizers to stabilize the structure of aluminum scaffolding tower.

The specifications are given below :

Sizes: 2.o Mtr Height & 1.0 Mtr Height

Type: With Ladder & Without Ladder

Rung: 2.0Mtr (4 Rung) & 1.0Mtr (2 Rung)

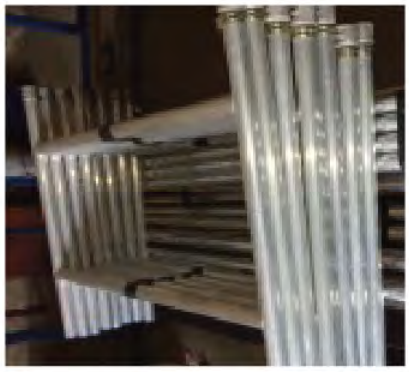

ALUMINIUM GUARDRAIL FRAMES

Sizes: 1.5Mtr Height & 1.0 Mtr Heigh

Type: With Ladder & Without Ladder.

ALUMINIUM BRACES

Types: Horizontal Braces with Hooks Diagonal Braces with Hooks.

Technical Specifications

Length: 1.80 Mtr Width : 0.80 Mtr

Height: 2:00 Mtr to 10:00 Mtr

Frames Height: 2 Mtr, 1 Mtr & 1.5 Mtr

Castor Wheels: 200 mm with Jack & 150 mm with Jack or without Jack

Wooden Platforms: Standard Platform & Trapdoor Platform

Maximum load per Platform 225 kg and for the Entire Tower is 600 kg including Tower.

SINGLE WIDTH ALUMINUM SCAFFOLDING

Maximum operating height for interior and exterior work is 10 M. The Platform hook of the tower is provided with the wind-lock system. Deck board edge protection by metallic element Deck profile simply to use toeboard system. The frames association has protection pins to stop accidental removal of the frame.

Equal length braces, Stabilizers, Platforms, Wheel legs, and toeboard is combined with alternative spans fifty series parts. Single WIdth Aluminum Scaffolding used as higher or lower, merely place your platform on the third rung below the highest of the tower and proper rail height is achieved.

Technical Specifications:

Length: 1.45 Mtr Double width tower

Width: 2.50 Mtr

Height: 2.00 Mtr to 15.00 Mtr

Frames Heights: 2.00 Mtr, 1.00 Mtr

Castor Wheels: 200mm with Jack & 150mm with Jack or without Jack

Wooden Platform: Standard Platform & Trapdoor Platform Maximum load per platform 225 kg and for the entire tower is 600 kg inching Tower.

DOUBLE WIDTH ALUMINUM SCAFFOLDING

Double Width Aluminum Scaffolding Z assembles bracing allows a fast bother free assembly whereas providing a really rigid structure. All frames are used as higher or lower, merely place your platform on the third rung below the highest of the tower and proper rail height is achieved.

The wheel of mobile access tower constitutes of twin pedal brake for straightforward in applying the brake and disengage quickly for moving.

CASTOR WHEELS

Sizes: 200mm & 150mm Diameter

Jack: Aluminum Jack

Adjustable Legs: To Provide Height Adjustment

Brakes: With Single Brakes or Double Brakes to lock the Castor Wheels

ALUMINUM SCAFFOLDING SYSTEM

Narrow Aluminum Scaffolding System

- Scaffolding Width : 750mm
- Scaffolding Length : 1800mm, 2500mm and 3000mm
- Working Height : 4500mm, 13450mm
- Loading Capacity : 200 kg

Features :

- The single-width scaffolding tower fits a single platform per level and is ideal for accessing heights where space is constrained.
- Option to work at several heights and one time, by using additional platforms
- Minimal storage space, due to less number and size of parts

Application:

- Installation works
- Maintenance
- Ceiling and A/C work
- Painting contractors
- Construction work
- Industrial use
- Cleaning jobs
- Shafts and narrow work area

Wide Aluminum Scaffolding System

- Scaffolding Width : 1350mm,
- Scaffolding Length : 1800mm, 2500 and 3000mm
- Working Height : 4500mm, 13450mm
- Loading Capacity : 200 Kg

Features:

- Ladder frame allows easy ascent to the top
- Light weight, easy assembly/ disassembly method
- Option to work at several heights at one time, by using additional platforms

Application:

- Installation works
- Maintenance
- Ceiling and A/C work
- Painting contractors
- Construction work
- Industrial use
- Cleaning jobs

Stairway Aluminum Scaffolding System

- Scaffolding Width : 1350mm and 1900mm
- Scaffolding Length : 1800mm, 2500mm
- Working Height : 4500mm, to 12350mm

Features:

The stairway scaffolding provides optimum safety owing to its staircase system, along with handrail feature. It is ideal for large load capacity climbing in addition to allowing access to elevated heights.

Application:

- Installation works where hoisting materials is difficult or dangerous For highest safety ascent

Extra Wide Aluminum Scaffolding System

- Scaffolding Width : 1800mm and 2500mm
- Scaffolding Length : 2500mm
- Working Height : up to 12300mm

Features:

- Platform with wide working area
- Convenient and flexible for material handling

Application:

- Best equipment for more workers.

Extra Reach Aluminum Scaffolding System

- Scaffolding Width : 1350mm and 1900mm
- Scaffolding Length : 1800mm, 2500 and 3000mm
- Working Height : 13400mm and 30400mm
- Antiskid Platform and stairways designed for elevated working area.

Features:

- Proper & safe working platform
- Eliminate high risk operation
- Easily movable from one to another place.

Application:

- Ideal For high reach operation

Cantilever Aluminum Scaffolding System

- Cantilever Width : 750mm
- Cantilever Length : 1800mm, 2500mm, 3000mm
- Working Height : 8600mm, 6650mm

Features:

- Allows increased platform width
- Access to out of reach areas
- Simple connection to tower

Application:

- Cantilever scaffolding system is being used to fill the gap between the scaffold and structure.

WOODEN PLANKS STEEL PLANKS & PLYWOOD

Used in Kwikstage system. Anti-slip surface.

Width: 225mm, 300mm, etc

Length: can be under request

Pass AS 1577-1993 Scaffold planks

(testing plank size L=2450mmx W=225mm)

Description	Width (in)	Effective Length (ft,in)	Weight (lbs)
Steel Plank - 2' (1.8 mm thickness)	9"	2'	11.60
Steel Plank - 2'7" (1.8mm thickness)	9"	2'7"	13.00
Steel Plank - 3' (1.8 mm thickness)	9"	3'	14.59
Steel Plank - 3'6" (1.8 mm thickness)	9"	3'6"	16.50
Steel Plank - 4' (1.8 mm thickness)	9"	4'	18.59
Steel Plank - 5' (1.8 mm thickness)	9"	5'	22.66
Steel Plank - 6' (1.8 mm thickness)	9"	6'	26.05
Steel Plank - 7' (1.8 mm thickness)	9"	7'	30.76
Steel Plank - 8' (1.8 mm thickness)	9"	8'	34.72
Steel Plank - 9' (1.8 mm thickness)	9"	9'	37.75
Steel Plank - 10' (2 mm thickness)	9"	10'	46.64

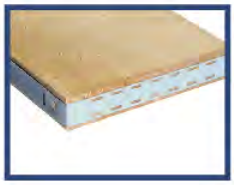

ACCESSORIES

Scaffolding Support

Prop Sleeve with Nut

H - Frame

Double Coupler Drop Forged

Swivel Coupler Drop Forged

Swivel Coupler Pressed

Cuplock Standard

Drop Head Adapter

Shuttring Clamp

Double Coupler Fixed Pressed

Single Coupler Pressed

Universal Clamp

Wedge Plate

Ledgers (Cup lock System)

Beam Clamp (Cast & Forged)

Putlog Coupler Pressed

Gravlock Coupler

BRC Coupler

Grating Clamp

Hex Nuts & Washers

Bolts

Double Coupler Fixed Light Weight Pressed

Swivel Coupler Pressed

Roofing Coupler

Sleeve Coupler

Fencing Coupler

H-Frame Pin

Wing Nut

Rapid Clamp

Water Stopper

Joint Pin Standard

Transom Ledger Type 1

Transom Ledger Type 2

Jack Nut

Prop Nut with Handle

Scaffolding Spanner

Waller Plate

Prop Plate

Rossette Pressed

Snap Lock

Tie Rod

Drop Head

Bottom Cup

Ledger Blade

Top Cup

U - Head Jack (Hollow Type & Solid Type)

Universal Jack

Base Jack

ZEIAD TRADING

M: +971 50 618 7143 | +971 50 830 7252 | +971 50 773 7532 | +971 50 931 1085
T: 03 721 6937 **E:** zeiadtrading@hotmail.com
F: 03 766 4453 P.O. Box 1272, Al Ain, UAE

MAIN BRANCH
Sanaiya, 6th street building no.5
(Opposite to bin Hamood a service center)

الفرع الرئيسى
صناعيه العين، شارع رقم ٦
بنايه رقم ٥،

BRANCH 2
Industrial Area - Alain Sanaiya,
4th Street Building no. 38

الفرع ٢
المنطقه الصناعيه العين شارع رقم ٤،
بنايه رقم ٣٨

BRANCH 3
Mazyad, Al Khirayr Camps,
Alain 64th Street

الفرع ٣
مزيد منطقه الخرير، معسكر الشركات،
شارع رقم ٦٤