EXCEL TECH

Quality & Accuracy....*assured*

EXCEL TECH

Excel Tech an ISO 9001 : 2008 company established as an independent 100% own manufacturing company for Pressure & Temperature measuring solutions with '**Raj Tech**' brand.

Team work of technocrats with years of rich experience in the field of process instrumentation & latest manufacturing techniques enable excel tech instruments to offer new development at each stage of the journey of progress.

Excel Tech as an organisation functions on modern methods of manufacturing, excellent designed facilities as well as sufficient infrastructure to produce high quality products and employs state-of-the-art technology to deliver top quality products that match global standard requirements. Synonymous with excellence, **Excel Tech** instruments are recogonised not just for its high quality products that are compliant with global standard requirements, but also for developing innovation solution that deliver additional value to the customers. **Excel Tech's** products are developed to meet specific requirements of emerging sectors.

INDEX

PRESSURE GAUGES	02 - 04
DIFFERENTIAL PRESSURE GAUGE	05 - 06
LOW PRESSURE GAUGE	07
DIAPHRAGM SEALED PRESSURE GAUGE	08 - 09
SANITARY DIAPHRAGM SEALED PRESSURE GAUGE	10
SPECIAL INDUSTRY PURPOSE PRESSURE GAUGE	11
TEMPERATURE GAUGES	12 - 14
DISPHRAGM SEALS	15 - 16
SERVICE & ACCESSORIES PRODUCTS	17 - 20
RTDs & THERMOCOUPLES	21 - 27
THERMOWELL	28 - 29
PRESSURE & TEMPERATURE SWITCH	30
MISCELLANEOUS	31 - 32
STAINLESS STEEL TUBES & FITTINGS	33
SS316 RELIEF VALVES	34
BRONZE SAFETY VALVES	35
PRESSURE SWITCH	36

PRESSURE GAUGES

FULL STAINLESS STEEL

APPLICATIONS

- Liquid & Gaseous mediums
- Corrosive environments
- Oil & Gas applications
- Chemical & Petrochemical
- Food & Beverages
- Nuclear Power plants
- Pharmaceutical, Rubber & Glass Industries

BASIC MODEL	WP6	WP4	WPT	ESW
DESCRIPTION	All SS 316 Wetted Parts Pressure Gauge, Bourdon Type Dry (STD) / liquid Filled (Optional) CE marking External zero adjustment (Optional)	All SS 304 Wetted Parts Pressure Gauge, Bourdon Type Dry (STD) / liquid Filled (Optional) CE marking External zero adjustment (Optional)	All SS Pressure Gauge Bourdon Type (Twin Part System) Socket Welded to Case For Range Above 600 Bar Dry (STD) / liquid Filled (Optional)	Economical SS304 Pressure Gauge Low Cost Bourdon Type Dry (STD) / liquid Filled (Optional)
NOMINAL DIAL SIZES	DN100, DN125, DN150, DN 200 & DN250	DN100, DN125, DN150, DN 200 & DN250	DN40, DN50, DN63 & DN80	DN100 & DN150
RANGE[1]	-1...2000 bar	-1...2500 bar	-1...400 bar for DN40 & DN 50 -1...1,000 bar for DN63 & DN80	-1...1,000 bar
ACCURACY	CL 1.0 CL 0.5[2]	CL 1.0 CL 0.5[2]	CL 1.0	CL 1.0
TYPE OF MOUNTING	Bottom with wall mounting Bottom Lower back Lower back with 3-hole panel Lower back with bracket Center back Center back With Panel	Bottom with wall mounting Bottom Lower back Lower back with 3-hole panel Lower back with bracket Center back Center back With Panel	Bottom Centre back Bottom with wall mounting Centre back with 3-hole panel Centre back with bracket Lower back[3] Lower back with Panel[3]	Bottom with wall mounting Bottom Lower back Lower back with 3-hole panel Lower back with bracket
PROCESS CONNECTION	1/4" BSP (M) / NPT (M) 3/8" BSP (M) / NPT (M)	1/4" BSP (M) / NPT (M) 3/8" BSP (M) / NPT (M)	1/8" BSP (M) / NPT (M) 1/4" BSP (M) / NPT (M)	1/4" BSP (M) / NPT (M) 3/8" BSP (M) / NPT (M)
WETTED PARTS	AISI 316 SS AISI 316 L (Optional)	AISI 304 SS	AISI 316 SS AISI 316 L (Optional)	AISI 304 SS
CASE MATERIAL	AISI 304 SS Snap Action Bayonet AISI 316 SS[3] (Optional)	AISI 304 SS Snap Action bayonet	AISI 304 SS Crimped (Bayonet)[3] AISI 316 SS[3]	AISI 304 SS Snap Action Bayonet Bezel
PROTECTION CLASS	IP 66 as per IS/IEC 60529:2001	IP 66 as per IS/IEC 60529:2001	IP 66 as per IS/IEC 60529:2001	IP 66 as per IS/IEC 60529:2001
REFERENCE STANDARD	EN 837-1	EN 837-1	EN 837-1	EN 837-1
SAFETY CLASS	S1 (Open front, blow off disc)	S1 (Open front, blow off disc)	S1 (Open front)	S1 (Open front)
WINDOW	Toughened glass Shatterproof / Plexi[3]	Toughened glass Shatterproof / Plexi[3]	Toughened glass Shatterproof / Plexi[3]	Toughened glass Shatterproof / Plexi[3]
OPTIONAL EXTRAS	NACE MR0175 IBR certificate Dampened / Jelly movement MRP Pointer Short overpressure Oxygen service Receiver Ranges Freon / Ammonia Temp. Scale	IBR certificate[3] Dampened / Jelly movement MRP Pointer Short overpressure Oxygen service Receiver Ranges Freon / Ammonia Temp. Scale	MRP Pointer[3] Oxygen service Dampened / Jelly movement Freon Ranges With Temp. Scale	MRP Pointer Short overpressure Oxygen service Freon / Ammonia Temp. Scale

Notes: 1. In two piece construction (case connected to process connection through sealed compression thread).
2. Optional, charges extra, for Prices see Price List.
3. Other connections & sizes are available, charges extra, for Prices see Price List.
4. Equivalent scales available in kg/cm², psi, kPa, MPa, bar/psi, kPa/bar, kPa/psi or any other special scales.
5. Snap Action Bayonet Case & Bezel Optional for Dial Size 80, 63 & 50mm.

RAJ TECH
www.rajtech-fc.com

PRESSURE GAUGES

FULL STAINLESS STEEL / UTILITY

APPLICATIONS

- Liquid & Gaseous mediums
- Corrosive environments
- Oil & Gas applications
- Chemical & Petrochemical
- Food & Beverages
- Nuclear Power plants
- Pharmaceutical, Rubber & Glass Industries

BASIC MODEL	ESG	EGT	SF6	UT
DESCRIPTION	Economical SS304 Pressure Gauge Low Cost Bourdon Type Liquid Filled (Glycerin Filled)	SS Case Brass Internal Bourdon Type Pressure Gauge (Two Part System) Liquid Filled (Glycerin Filled)	Solid front Pressure Gauge Bourdon Type Solid front with full blow back SS 316 Internal	Utility / Commercial Pressure Gauge General purpose application Brass / Copper alloy system
NOMINAL DIAL SIZES	DN100 & DN150	DN40, DN50, DN63 & DN80	DN100 & DN150	DN40, DN50, DN63, DN80, DN100, DN150, DN200 & DN250
RANGE	-1...1,000 bar	-1...70 bar for DN40 -1...400 bar for DN50, DN63, DN80	-1...2500 bar	-1...40 bar for DN40 -1...1000 bar for others
ACCURACY	CL 1.0	CL 1.6	CL 1.0	CL 2.5 for DN40 & DN50 CL 1.6 for others
TYPE OF MOUNTING	Bottom with wall mounting Bottom Lower back Lower back with 3-hole panel Lower back with bracket	Bottom Centre back Bottom with wall mounting Centre back with 3-hole panel Centre back with bracket	Bottom with wall mounting Bottom Lower back Lower back with 3-hole panel	Bottom with wall mounting Bottom Centre back Centre back with 3-hole panel Centre back with mounting bracket
PROCESS CONNECTION	1/4" BSP (M) / NPT (M) 3/8" BSP (M) / NPT (M)	1/8" BSP (M) / NPT (M) 1/4" BSP (M) / NPT (M)	1/2" BSP (M) / NPT (M)	1/8" BSP (M)...1/2" BSP (M) 1/8" NPT (M)...1/2" NPT (M)
WETTED PARTS	AISI 304 SS	Brass / Copper Alloy Bourdon SS 316 (40 bar and above)	AISI 316 SS AISI 316 L (Optional)	Copper Alloy
CASE MATERIAL	AISI 304 SS Crimped Type Bezel	AISI 304 SS Crimped Type Bezel	AISI 304 SS Snap Action Bayonet AISI 316 SS	Steel, black painted
PROTECTION CLASS	IP 68 as per IS/IEC 60529:2001	IP 65 as per IS/IEC 60529:2001	IP 65 as per IS/IEC 60529:2001	IP 32
REFERENCE STANDARD	EN 837-1	EN 837-1	EN 837-1	EN 837 - 1
SAFETY CLASS	S1 (Open front)	S1 (Open front)	S3 (Solid Front Full Blow Back)	-
WINDOW	Plexi / Acrylic	Plexi / Acrylic	Toughened glass Shatterproof / Plexi	Sheet glass
OPTIONAL EXTRAS	Short overpressure Oxygen service Fresh / Ammonia Ranges with Temperature Scale	Oxygen service Dampened / Jelly movement Fresh Ranges With Temp. Scale	MRP Pointer Oxygen service Dampened / Jelly movement External Zero Adjustment NACE MR 0175 IBR Certificate	Oxygen service Dampening screw Customized dials as per OEM Fresh Ranges with temp. scale Fresh Ranges with temp. scale & with SS wetted parts

Notes
1. In two piece construction (case connected to process connection through sealed compression fitment).
2. Optional, charges extra, for Prices see Price List.
3. Other connections & scale are available, charges extra, for Prices see Price List.
4. Equivalent scales available in kg/cm2, psi, kPa, MPa, bar/psi, kPa/bar, kPa/psi or any other special scales.

RAJ TECH
www.rajtech-fc.com

APPLICATIONS

- Pumps & motor controls
- Water treatment plants
- Hydraulic & pneumatics
- Chemical & petrochemicals
- Pharmaceutical industries
- HVAC & compressor industries
- Refrigeration

BASIC MODEL	EC	BEC	PGT	DPG
DESCRIPTION	Electrical contacts Pressure Gauge Dome type case	Electrical contacts Pressure Gauge High Case version Filled version optional	Analogue gauge with transmitter Solid front with full blow back Transmitter output (4...20 mA)	Digital Pressure Gauge SS case Accuracy +/- 0.1 % of FS
NOMINAL DIAL SIZES	DN63, DN100 & DN150	DN100 & DN150	DN100 & DN150	DN100
RANGE	-1...2500 bar (DN63 upto 700 bar)	-1...2500 bar	-1...600 bar	-1...1000 bar
ACCURACY	CL 1.0	CL 1.0	CL 1.0	+/- 0.1 % of F.S.
MOUNTING STYLES	Bottom Lower back Bottom with wall mounting Lower back with 3-hole panel Lower back with mounting bracket Center back for DN63	Bottom Lower back Bottom with wall mounting Lower back with 3-hole panel Lower back with mounting bracket	Bottom Bottom with wall mounting	Bottom Back Direct
PROCESS CONNECTION	1/4" BSP (M) / 3/8" BSP / NPT (M) 1/2" BSP (M) / NPT (M)	3/8" BSP / NPT (M) 1/2" BSP (M) / NPT (M)	1/2" NPT (M) 1/2" BSP (M)	1/4" BSP (M)
WETTED PARTS	AISI 316 SS	AISI 316 SS	AISI 316L SS	AISI 316 SS
CASE MATERIAL	AISI 304 SS AISI 316 SS	AISI 304 SS AISI 316 SS	AISI 304 SS	AISI 304 SS
PROTECTION CLASS	IP 55 as IS/IEC 60529 2001	IP 68 as per IS/IEC 60529 2001	IP 65 as per IS/IEC 60529 2001	IP 65 as per IS/IEC 60529 2001
REFERENCE STANDARD	EN 837 - 1	EN 837 - 1	EN 837 - 1	-
SAFETY CLASS	S1 (Open front, blow off disc)	S1 (Open front, blow off disc)	S3 (Solid front, full blow back)	
WINDOW	Poly carbonate Dome	Pleat / Acrylic	Shatterproof Pleat	-
OPTIONAL EXTRAS	CE approved contacts Single / Double insulated contacts Dampened / Jelly movement	CE approved contacts Single / Double insulated contacts Inductive type contacts Dampened / Jelly movement Liquid (Dielectric oil filled) Filled	Dampened / Jelly movement	**Standard Features :** Auto off Function Backlight alpha numeric display Feather touch keypad Dedicated ZERO key Peak Pressure Measurement With NABL Lab Certificate

Notes
1. Other connections & sizes are available, charges extra, contact factory for details.
2. Optional, charges extra, contact factory for details.
3. Equivalent scales available in kg/cm², psi, kPa, MPa, bar(a), kPa(abs), kPa(gauge) or any other special scales.
4. Gauge accuracy CL 1.0 & Switching accuracy within CL 2.0
5. Gauge accuracy CL 1.0 & Switching accuracy as per the Microswitch / Transmitter

DIFFERENTIAL PRESSURE GAUGES

DIAPHRAGM / BOURDON / CAPSULE

APPLICATIONS

- Liquid & gaseous mediums
- Corrosive environments
- Oil & Gas applications
- Chemical & Petrochemical
- Filtration & Water applications
- Pumps, compressors & diesel engines

BASIC MODEL	DD1	DD2	BDP	CDP
DESCRIPTION	Differential Pressure Gauge Single Diaphragm type Case & Measuring System SS Dry (STD) / liquid filled (Optional) Electrical Contact (Optional)	Differential Pressure gauge Double Diaphragm type Electric contacts (Optional) Static pressure 100 bar (max) Dry (STD) / liquid filled (Optional) External Zero Adjustment	Differential Pressure Gauge Twin Bourdon Type Static pressure 2 Time of Full Span All SS measuring system Electric contacts (Optional)	Differential Pressure Gauge Twin Diaphragm Capsule Very Low Pressure Measurement All SS measuring system Suitable of Clean Air / Gas Only
NOMINAL DIAL SIZES RANGE	DN100, DN125 & DN150 LP : 250mmWC ... 6000 mmWC HP : 0.6 BAR to 10 BAR	DN100, DN125 & DN150 400 mmWC ... 60 bar	DN150 600 mbar ... 20 bar	DN100 / DN 150 10 mbar ... 250 mbar
ACCURACY	CL 2.5	CL 1.6	CL 2.5	CL 2.5
MOUNTING STYLES	Bottom Bottom with wall mounting Bottom with 2" Pipe / Yoke Centre back with 3-hole panel	Bottom Bottom with wall mounting Bottom with 2" Pipe / Yoke Centre back with 3-hole panel	Bottom Bottom with wall mounting	Bottom Bottom with wall mounting
PROCESS CONNECTION CHAMBERS	1/4" NPT (F) x 2 Nos AISI 304 SS (STD) AISI 316 SS (Optional) AISI 316L SS (Optional)	1/4" NPT (F) x 2 Nos AISI 304 SS AISI 316L SS	3/8" BSP (M) x 2 Nos AISI 316 SS Connection / Socket	3/8" BSP (M) x 2 Nos AISI 316 SS Connection / Socket
DIAPHRAGM	LP Range : AISI 316 SS HP Range : Spring Steel With PTFE Coated	AISI 316L SS	AISI 316 SS Bourdon Tube	AISI 316 SS Capsule Diaphragm
CASE MATERIAL	AISI 304 SS AISI 316 SS (Optional)	AISI 304 SS AISI 316 SS (Optional)	AISI 304 SS	AISI 304 SS AISI 316 SS (Optional)
PROTECTION CLASS	IP 65 as per IS/IEC 60529:2001	IP 65 as per IS/IEC 60529:2001	IP 65 as per IS/IEC 60529:2001	IP 68 as per IS/IEC 60529:2001
STATIC PRESSURE	2.5 bar for 250 ... 600 mmWC 10 bar for 1000 ... 6000 mmWC 40 bar for 1 ... 10 BAR	100 bar standard 200 bar (Optional)	2 Times of Scale Range For Higher Static We Recommend Gauge Saver at both Entry	max. 400 mbar for DN 100 max. 250 mbar for DN 150
WINDOW	Toughened Glass	Shatterproof, Toughened glass	Toughened Glass	Toughened Glass
REFERENCE STANDARD	EN 837 - 3	EN 837 - 3	EN 837 - 1	EN 837 - 3
OPTIONAL EXTRAS	NACE MR0175 Oxygen service CE Approved Electrical Contact Inductive Contact Dampened / Jelly movement	Oxygen service CE approved contacts Single / Double insulated contacts Inductive type contacts	CE approved contacts Single / Double insulated contacts	

RAJ TECH

Notes: 1. Options, change extra, contact factory for details.
2. Other connections, sizes & Material are available, charges extra, contact factory for details.
3. Equivalent scales available in kg/cm², psi, kPa, MPa, bar/psi, kPa/psi, kPa/psi or any other special scales.
4. Switching accuracy within CL 5.0

DIFFERENTIAL PRESSURE GAUGES

PISTON / DIAPHRAGM / CAPSULE

APPLICATIONS

- Hydraulic & pneumatic
- Pumps & compressors
- Diesel engines
- Water applications
- Filteration plants
- Blower vacuum monitoring
- Duct or room pressures
- Clean room applications

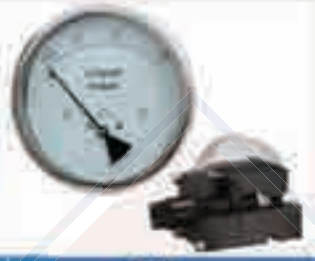

BASIC MODEL	DP1	DP2	E2000	EDG
DESCRIPTION	Differential Pressure Gauge Piston operated Static pressure 400 bar Migrated pressure chamber	Differential Pressure Gauge Diaphragm & Piston operated Static pressure 35 bar Isolated pressure chamber	Differential Pressure Gauge Die cast aluminum case Silicon rubber diaphragm Red tipped pointer	Draft Gauge Economical version
NOMINAL DIAL SIZES	DN63, DN100 & DN150	DN63, DN100 & DN150	120 mm	150x78 mm OR 200x104 mm
RANGE	0.25...10 bar	25 mmWC...600 mmWC (LP) 0.075...4 bar (HP)	5 mmWC...500 mmWC	-600...600 mbar
ACCURACY (According)	CL 4.0 CL 2.5	CL 4.0 CL 2.5	CL 2.0	CL 2.5
MOUNTING STYLES	Bottom entry Back entry In-line entry 3-hole panel (Optional for all entry)	In-line entry 3-hole panel (Optional)	Back / Panel	Back with wall mounting
PROCESS CONNECTION	1/4" NPT (F) x 2 Nos	1/4" NPT (F) x 2 Nos	1/8" NPT (F) x 2 Nos	1/4" BSP (M)
WETTED PARTS	AISI 316 SS Aluminum	AISI 316 SS Aluminum	Aluminum	Copper Alloy and AISI 304 SS
CASE MATERIAL	AISI 304 SS	AISI 304 SS	Die cast aluminum	Steel, black painted
PROTECTION CLASS	IP 65 as per IS/IEC 60529:2001	IP 65 as per IS/IEC 60529:2001	-	-
STATIC PRESSURE	400 bar 700 bar (Optional)	100 bar for HP 35 bar for LP	15 psig	-
WINDOW	Plexi / Acrylic Shatterproof	Plexi / Acrylic Shatterproof	Poly carbonate	Plexi
OPTIONAL EXTRAS	MRP Pointer Reed switches	MRP Pointer Reed switches		SS tag plate

Notes: 1. Other connections & sizes are available, charges extra, contact factory for details.
2. Optionals charges extra, contact factory for details.
3. Equivalent scales available in kg/cm², psi, kPa, MPa, bar/psi, kPa/psi, kPa/psi or any other special scales.

RAJ TECH
www.rajtech-fc.com

APPLICATIONS

- Low viscous liquids
- LP draft measurement
- Non-crystallized media
- Non-corrosive environments
- Clean-air, pharmaceutical & breweries

BASIC MODEL	CC6	CC4	LPD	SCH
DESCRIPTION	Low Pressure Capsule Gauge All SS 316 Measuring System Socket-case direct welded Zero adjustment, on dial Dry Version only	Low Pressure Capsule Gauge All SS 304 Measuring System Socket-case direct welded Zero adjustment, on dial Dry Version only	Low Pressure Diaphragm Gauge All SS Measuring System Threaded / Flanged connections	Schaffer Diaphragm Pressure Gauge all SS Measuring System Threaded Flanged connections
NOMINAL DIAL SIZES	DN63, DN100, DN125 & DN150	DN63, DN100, DN125 & DN150	DN100 & DN150	DN100 & DN150
RANGE	-600...25...600 mbar 6...16 mbar*	-600...25...600 mbar 6...16 mbar*	25...600 mbar	-1...0.6...14 bar
ACCURACY	CL 1.6 CL 2.5	CL 1.6 CL 2.5	CL 1.6 CL 2.5 (below 60 mbar)	CL 1.6
MOUNTING STYLES	Bottom with wall mounting Bottom Lower (LB) / Centre (CB) back LB / CB with 3-hole panel LB / CB with mounting bracket	Bottom with wall mounting Bottom Lower (LB) / Centre (CB) back LB / CB with 3-hole panel LB / CB with mounting bracket	Bottom Bottom with 2" Pipe / Yoke	Bottom Bottom with 2" Pipe / Yoke
PROCESS CONNECTION	½" NPT (M) / BSP (M) (DN100/125/150) ½" NPT (M) / BSP (M) (DN63)	½" NPT (M) / BSP (M) (DN100/125/150) ½" NPT (M) (DN63)	1/2" NPT (M) 1/2" BSP (M)	1/2" NPT (M) 1/2" BSP (M)
WETTED PARTS	AISI 316 SS	AISI 304 SS	AISI 316 SS	AISI 316 SS*
CASE MATERIAL	AISI 304 SS AISI 316 SS*	AISI 304 SS	AISI 304 SS AISI 316 SS*	AISI 304 SS AISI 316 SS*
PROTECTION CLASS	IP 32 (for DN63 Bottom Mounting) IP 68 (for all other)	IP 32 (for DN63 Bottom Mounting) IP 68 (for all other)	IP 65 as per IS/IEC 60529:2001	IP 65 as per IS/IEC 60529:2001
REFERENCE STANDARD	EN 837 - 3	EN 837 - 3	EN 837 - 3	EN 837 - 3
SAFETY CLASS	S1 (Open front)	S1 (Open front)	S1 (Open Front)	S1 (Open Front)
WINDOW	Toughened glass Shatterproof / Plexi*	Toughened glass Shatterproof / Plexi*	Toughened glass Shatterproof / Plexi*	Toughened glass Shatterproof / Plexi*
OPTIONAL EXTRAS	External zero adjustment Dampening screw ON/OFF type vent plug	External zero adjustment Dampening screw ON/OFF type vent plug	PTFE protection on wetted parts Oxygen service External Zero adjustment* CE Approved Electrical Contact	Filled version External zero adjustment PTFE protection on wetted parts Oxygen service CE Approved Electrical Contact

Notes
1. Other connections & sizes are available, charges extra, contact factory for details.
2. Optional, charges extra, contact factory for details.
3. Expansion scales available in kg/cm², psi, kPa, MPa, bar, inHg/bar, inHg/psi or any other special scales.
4. Diaphragm material Spring steel + PTFE coated
5. Not available in DN63 sizes.
6. Only available in DN100 & DN150.

RAJ TECH

APPLICATIONS

- Sterile applications
- Oil & Gas applications
- Corrosive environments
- Dairy, Ice cream industries
- Sanitary, food & beverages
- Pharmaceutical & paint industries
- Prevent Bacterial & fungal accumulation

BASIC MODEL	CDS	DS4	DS1	DS2
DESCRIPTION	Compact Diaphragm Pressure gauge Diaphragm seal integrally welded with top & bottom chamber	Compact Diaphragm Pressure gauge Diaphragm seal integrally welded with top & bottom chamber Heavy duty mini Diaphragm seal	Diaphragm Seal Pressure gauge Threaded Process connection Rigid construction Direct Coupled type sealed	Diaphragm Seal Pressure Gauge Flanged process connection Rigid Construction Direct Coupled flange type
NOMINAL DIAL SIZES	DN50, DN63, DN80* DN100 gauge should be ESW type	DN100, DN125, DN150 Gauge should be WFF type	DN100 & DN150	DN100, DN125 & DN150
RANGE	-1...70 bar	-1...250 bar	-1...250 bar	-1...70 bar
ACCURACY	CL 1.6	CL 1.0	CL 1.0	CL 1.0
MOUNTING STYLES	Bottom / Back	Bottom / Back	Bottom / Back / Wall Mounting	Bottom / wall mounting for remote Lower back with panel for remote
PROCESS CONNECTION	1/4" BSP (M) / NPT (M) 3/8" BSP (M) / NPT (M) 1/2" BSP (M) / NPT (M)	1/4" NPT (M) 1/4" BSP (M)	1/2" NPT (M) 1/2" BSP (M)	1"...4" flange, ANSI B16.5 Rating: 150#...2500#
WETTED PARTS (Diaphragm & Bottom chamber)	AISI 316 SS	AISI 316 SS	AISI 316 SS	AISI 316 SS Diaphragm AISI 316L SS
CASE MATERIAL	AISI 304 SS AISI 316 SS	AISI 304 SS AISI 316 SS	AISI 304 SS AISI 316 SS	AISI 304 SS AISI 316 SS
PROTECTION CLASS	IP 68 as per IS/IEC 60529:2001	IP 68 as per IS/IEC 60529:2001	IP 68 as per IS/IEC 60529:2001	IP 68 as per IS/IEC 60529:2001
REFERENCE STANDARD	EN 837-1	EN 837-1	EN 837-1	EN 837-1
SAFETY CLASS	S1 (Open front)	S1 (Open front, blow off disc)	S1 (Open front, blow off disc)	S1 (Open front, blow off disc)
WINDOW	Toughened glass / Plexi	Toughened glass	Toughened glass / shatterproof (op.)	Toughened glass / shatterproof (op.)
OPTIONAL EXTRAS	Filled version Oxygen service	Filled version Oxygen service	Filled version/Dampened movement Oxygen service Remote mounting with cap. extn CE approved Electrical Contact External zero adjustment	Filled version/Dampened movement Oxygen service Remote mounting with cap. extn CE approved Electrical Contact External zero adjustment

Notes
1. Other connections & sizes are available. (Charges extra, contact factory for details)
2. Options, charges extra, contact factory for details
3. Equivalent scales available in kg/cm², psi, kPa, MPa, bar/psi, kPa/psi, kPa/psi or any other special scales
4. DN63 measuring system

APPLICATIONS

- Sterile applications
- Oil & Gas applications
- Corrosive environments
- Dairy, Ice cream industries
- Sanitary, food & beverages
- Pharmaceutical & paint industries
- Prevent Bacterial & fungal accumulation

Specialize Products

BASIC MODEL	DS3	DSFF	DSP
DESCRIPTION	Diaphragm Seal Pressure Gauge Flanged process connection "U" Section / Rigid Construction Direct Coupled flange type	Diaphragm Seal Pressure Gauge Flanged process connection Flush Diaphragm	Diaphragm Seal Pressure gauge Specially Designed for Pulp & Paper Industry Floating Flange & Flush Diaphragm
NOMINAL DIAL SIZES	DN100, DN125 & DN150	DN100, DN125 & DN150	DN100
RANGE	-1...70 bar	-1...70 bar	-1...40 bar
ACCURACY	CL 1.0	CL 1.0	CL 1.0
MOUNTING STYLES	Bottom / wall mounting for remote	Bottom / wall mounting for remote	Bottom / Back
PROCESS CONNECTION	Lower back with panel for remote 1/2", 3/4", 1" flange, ANSI B16.5 Rating: 150#...300#	Lower back with panel for remote 1 1/2"...4" flange, ANSI B16.5 Rating: 150#...300#	Standard as per Pulp & Paper industry process connection
WETTED PARTS (Diaphragm & Bottom chamber)	AISI 316 SS Diaphragm AISI 316L SS (STD) **Diaphragm Material Optional**[1] Hastelloy C Tantalum Titanium Monel Incoloy 600	AISI 316 SS Diaphragm AISI 316L SS (STD) **Diaphragm Material Optional**[1] Hastelloy C Tantalum Titanium Monel Incoloy 600	AISI 316 SS Diaphragm AISI 316L SS (STD) Laser welded diaphragm
CASE MATERIAL	AISI 304 SS AISI 316 SS[1]	AISI 304 SS AISI 316 SS[1]	AISI 304 SS AISI 316 SS[1]
PROTECTION CLASS	IP 68 as per IS/IEC 60529:2001	IP 68 as per IS/IEC 60529:2001	IP 68 as per IS/IEC 60529:2001
REFERENCE STANDARD	EN 837-1	EN 837-1	EN 837-1
SAFETY CLASS	S1 (Open front, blow off disc)	S1 (Open front, blow off disc)	S1 (Open front, blow off disc)
WINDOW	Toughened glass Shatterproof glass (Optional)	Toughened glass Shatterproof glass (Optional)	Toughened glass Shatterproof glass (Optional)
OPTIONAL EXTRAS	Filled version/Dampened movement Oxygen service Remote mounting with cap. extn. CE approved Electrical Contact External zero adjustment PTFE Coated or Lined Wetted Parts	Filled version/Dampened movement Oxygen service Remote mounting with cap. extn. CE approved Electrical Contact External zero adjustment PTFE Coated or Lined Wetted Parts	Filled version/Dampened movement Anti-vibration connector Remote mounting with cap. extn. CE approved Electrical Contact External zero adjustment PTFE Coated Diaphragm

Combo Gauge (Pressure & Temp. Measurement)

Combo Gauge (Pressure & Temp. Measurement)

Differential Gauge (For Refrigeration Industries)

RAJ TECH

Notes
1. Other connections & sizes are available. Charges extra, contact factory for details.
2. Optional, charges extra, contact factory for details.
3. Equivalent scales available in kg/cm², psi, kPa, MPa, bar(s), kPa(a), kPa(g) or any other special scales.
4. DN(I) measuring system.

APPLICATIONS

- Sterile applications
- Corrosive environments
- Dairy, Ice cream industries
- Sanitary, food & beverages
- Pharmaceutical & paint industries
- Prevent Bacterial & fungal accumulation

BASIC MODEL	DSTC	HDS	DSSMS
DESCRIPTION	Sanitary Process Connection Tri-clamp connection Quick Connect / disconnect Laser welded diaphragm	Homogenisor Pressure Gauge Laser welded diaphragm Liquid Filled version	Sanitary Process Connection SMS Thread Union / Male Thread Quick Connect / disconnect Laser welded diaphragm
NOMINAL DIAL SIZES	DN50, DN63, DN80 & DN100	DN100	DN50, DN63, & DN100
RANGE	-1...40 bar	0...160 bar / 0...250 bar / 0...400 bar / 0...600 bar	-1...40 bar
ACCURACY	CL 1.6	CL 1.6	CL 1.6
MOUNTING STYLES	Bottom / Center back	Bottom	Bottom / Center back
PROCESS CONNECTION	1" & 1.5" Tri-clamp 2" Tri-clamp	Homogenisor connection Homogenisor with flange	DIN (DN 25, 32, 40, 50) SMS (1½" & 2") RJT (1½" & 2")
WETTED PARTS (Diaphragm & gas chamber)	AISI 316 SS Seal Body AISI 316L SS Diaphragm	AISI 316 SS Seal Body AISI 316L SS Diaphragm	AISI 316 SS Seal Body AISI 316L SS Diaphragm
CASE MATERIAL	AISI 304 SS AISI 316 SS	AISI 304 SS AISI 316 SS	AISI 304 SS AISI 316 SS
PROTECTION CLASS	IP 68 as per IS/IEC 60529:2001	IP 68 as per IS/IEC 60529:2001	IP 68 as per IS/IEC 60529:2001
REFERENCE STANDARD	EN 837-1	EN 837-1	EN 837-1
SAFETY CLASS	S1 (Open Front)	S1 (Open front, blow off disc)	S1 (Open front, blow off disc)
WINDOW	Toughened glass Shatterproof glass Plexi / Acrylic	Toughened glass Shatterproof glass Plexi / Acrylic	Toughened glass Shatterproof glass Plexi / Acrylic
OPTIONAL EXTRAS	Liquid filled version Tri clamp with gasket Bottom mating part CE Approved Electrical Contact Contact Only for DN100	MRP pointer CE Approved Electrical Contact Dampened / Jelly Movement	Liquid filled version Gaskets Bottom mating part CE Approved Electrical Contact Contact Only for DN100

Notes
1. Other connections & sizes are available. Charges extra. contact factory for details
2. Options, charges extra, contact factory for details
3. Equivalent scales available in kg/cm², psi, kPa, MPa, bar/psi, kPa/psi, kPa/psi or any other special scales
4. DN63 measuring system

APPLICATIONS

- Calibration & testing labs
- Mud pumps & Well drilling
- Oil & Gas applications
- Petroleum industries
- Nuclear power plants
- Furnace or flow measurement
- Steam boilers & thermal power stations

BASIC MODEL	TG	MG	MUD	PPS
DESCRIPTION	Test Pressure Gauge Precision measuring system Anti-parallax mirror band Precision measuring system High Precision SS movement	Master Pressure Gauge Precision measuring system High resolution dial Anti-parallax mirror band Jewel bearing movement	Mud Pressure Gauge Rugged construction Moving pointer, Fixed dial Fixed pointer, moving dial (Optional)	PP Case Solid Front Pressure Gauge Turret design Thermoplastic case Standard accuracy ±0.5% FS
NOMINAL DIAL SIZES	DN150 DN200 & DN250	DN150, DN200 & DN250	DN100 & DN150	4.5"
RANGE	-1 ...700 bar	-1 ...700 bar	0 ...40 bar up to 0 ...1000 bar	-1 ...2500 bar
ACCURACY	CL 0.5	CL 0.25	CL 2.0	CL 1.0 / CL 0.5 (Optional)
MOUNTING STYLES	Bottom Bottom with wall mounting Lower back Lower back with 3-hole panel Lower back with mounting bracket	Bottom Bottom with wall mounting Lower back Lower back with 3-hole panel Lower back with mounting bracket	Bottom	Bottom Bottom with wall mounting Lower back with 3-hole panel
PROCESS CONNECTION	1/2" NPT (M) 1/2" BSP (M)	1/2" NPT (M) 1/2" BSP (M)	2" NPT (M) 2" BSP (M)	1/2" NPT (M) 1/4" NPT (M)
WETTED PARTS	AISI 316L SS	Beryllium copper and AISI 316L SS	AISI 316 SS	AISI 316L SS Monel*
CASE MATERIAL	AISI 304 SS AISI 316 SS*	AISI 304 SS AISI 316 SS*	AISI 304 SS	PP
PROTECTION CLASS	IP 68 as per IS/IEC 60529:2001	IP 68 as per IS/IEC 60529:2001	IP 68 as per IS/IEC 60529:2001	IP 68 as per IS/IEC 60529:2001
REFERENCE STANDARD	EN 837-1	EN 837-1	-	ANSI B 40.1
SAFETY CLASS	S1 (Open front, blow off disc)	S1 (Open front, blow off disc)	-	Solid front, full blow back
WINDOW	Toughened / Shatterproof glass	Toughened / Shatterproof glass	Plexi	Toughened / Shatterproof / Plexi*
OPTIONAL EXTRAS	Solid Front case NABL traceability Wooden carrying case Calibration tool kit	Solid Front case NABL traceability Plastic / Wooden carrying case Calibration tool kit	SS tag plate	NACE MR0175 Damped movement Short overpressure Oxygen service

RAJ TECH

Notes: 1. Other connections & sizes are available, charges extra: contact factory for details.
2. Optional, charges extra, contact factory for details.
3. Equivalent scales available in kg/cm², psi, kPa, MPa, bar/psi, kPa/bar, kPa/psi or any other special scales.

TEMPERATURE GAUGE RANGE & STEM LENGTH GUIDE

Manufactured Temperature Ranges
-20...+40
-20...+60
-20...+80
-20...+100
-20...+120
-20...+180
-30...+50
-30...+70
-40...+40
-40...+60
-50...+100
-100...+60
0...50
0...60
0...80
0...100
0...120
0...150
0...160
0...200
0...250
0...300
0...400
0...500
0...600
0...650
50...650
100...600
100...700

Sensor Length Chart for Inert Gas Thermometer		
Stem / Sensor Size (mm)	(X) Sensor Length (mm)	(S) Minimum Stem Length (mm)
Rigid Stem type Inert Gas Thermometer		
Capillary type Inert Gas Thermometer (≤10 Mtr.)		
6 / 6.35	200	240
8 / 9.5	120	160
10	90	130
12 / 14	70	110
Capillary type Inert Gas Thermometer (>10 Mtr. up to 25 Mtr.)		
8 / 9.5	170	210
10	140	180
12 / 14	90	130

Capillary compensation is preferred for all capillary inert gas thermometers, whose capillary length is above 6 meter.

Sensor Length Chart for Bi-metal Thermometer				
Stem Diameter Range (°C)	6 mm & ¼" (mm)	8 mm (mm)	10 mm (mm)	12 mm (mm)
0...50	120	100	100	100
0...60	100	85	85	85
0...80	85	60	60	60
0...100	65	60	60	60
0...120	60	50	50	50
0...150	50	40	40	40
0...200	40	35	35	35
0...250	30	25	25	25
0...300	50	40	40	40
0...400	40	35	35	35
0...500	35	30	30	30
0...600	30	25	25	25

All length mentioned above are to be considered below thread only.

ELECTRIC CONTACT DETAILS (FOR PRESSURE / TEMPERATURE GAUGE SWITCHES)

Switch type	Contacts	Action	Rating
Normally closed (1NC)	Single	Break contact	230VAC/1A; 48VDC/0.5A
Normally open (1NO)	Single	Make contact	230VAC/1A; 48VDC/0.5A
Normally closed (2NC)	Double	Break contact	230VAC/1A; 48VDC/0.5A
Normally open (2NO)	Double	Make contact	230VAC/1A; 48VDC/0.5A
Normally closed + Normally open (1NC+1NO)	Double	Break contact + Make contact	230VAC/1A; 48VDC/0.5A
Normally open + Normally closed (1NO+1NC)	Double	Make contact + Brake contact	230VAC/1A; 48VDC/0.5A
SPDT	Single		230VAC/1A; 48VDC/0.5A
DPDT	Double		230VAC/1A; 48VDC/0.5A
Normally closed (1NC)	Single	Break contact	220VAC/0.4A
Normally open (1NO)	Single	Make contact	220VAC/0.4A
Normally closed (2NC)	Double	Break contact	220VAC/0.4A
Normally open (2NO)	Double	Make contact	220VAC/0.4A
Normally closed + Normally open (1NC+1NO)	Double	Break contact + Make contact	220VAC/0.4A
Normally open + Normally closed (1NO+1NC)	Double	Make contact + Brake contact	220VAC/0.4A

MICROSWITCH DETAILS (FOR PRESSURE / TEMPERATURE SWITCHES)

Microswitch protection	Type	Switch rating
General, low deadband	1 SPDT	250VAC/15A; 24VDC/2A or 110VDC/0.4A or 220VDC/0.2A
General, high deadband	1 SPDT	250VAC/15A; 24VDC/6A or 110VDC/0.5A or 220VDC/0.25A
Adjustable differential	1 SPDT	250VAC/15A
Gold plated contact	1 SPDT	125VAC/1A; 28VDC/0.5A
Environmentally sealed silver contact	1 SPDT	250VAC/15A; 125VDC/0.4A
Environmentally sealed gold contact	1 SPDT	28VDC/1A
Hermetically sealed silver contact	1 SPDT	230VAC/4A; 28VDC/3A resistive; 24VDC/2A inductive
Hermetically sealed gold contact	1 SPDT	125VAC/1A
High DC rating	1 SPDT	125VAC/10A; 125VDC/10A resistive; 125VDC/6A inductive
DPDT	1 DPDT	125VAC/10A; 250VDC/0.2A resistive

THERMOMETER

INERT GAS FILLED

APPLICATIONS

- Liquid & gaseous mediums
- Corrosive environments
- Oil & Gas applications
- Chemical & Petrochemical

BASIC MODEL	GT (Remote Sensing)	GT (Rigid Stem)	GT + BEC	GT + EC
DESCRIPTION	Temperature Gauge With Capillary Inert Gas Filled Expansion Bi-metal compensation	Temperature Gauge Rigid Stem Inert Gas Filled Expansion Bi-metal compensation	Temperature Gauge Rigid Stem With Electric contacts (High Case) Inert Gas Filled Expansion Bi-metal compensation	Temperature Gauge Rigid Stem With Electric contacts (Dome Type) Inert Gas Filled Expansion Bi-metal compensation
NOMINAL DIAL SIZES	DN100, DN125, DN150 & DN250	DN100, DN125, DN150 & DN250	DN100 & DN150	DN100 & DN150
RANGE	-40...650°C	-40...650°C	-40...650°C	-40...650°C
STEM LENGTH (BELOW THREAD)	110...800 mm Consult factory for higher length	110...800 mm Consult factory for higher length	110...800 mm Consult factory for higher length	110...800 mm Consult factory for higher length
STEM DIAMETER	6 mm / 8mm / 10mm / 12 mm Consult factory for non-standard Diameter	6 mm / 8mm / 10mm / 12 mm Consult factory for non-standard Diameter	6 mm / 8mm / 10mm / 12 mm Consult factory for non-standard Diameter	6 mm / 8mm / 10mm / 12 mm Consult factory for non-standard Diameter
ACCURACY	CL 1.0 as per EN 13190	CL 1.0 as per EN 13190	Gauge CL 1.0 as per EN 13190 Switching CL 5.0 as per EN 13190	Gauge CL 1.0 as per EN 13190 Switching CL 5.0 as per EN 13190
MOUNTING STYLES	Bottom with wall mounting Lower back / Centre back With 3-hole panel Lower back with mounting bracket	Bottom Lower back Centre back Every angle mounting	Bottom Lower back / Centre back Bottom with wall mounting Lower back with 3-hole panel Lower back with mounting bracket Every angle mounting	Bottom Lower back / Centre back Bottom with wall mounting Lower back with 3-hole panel Lower back with mounting bracket Every angle mounting
PROCESS CONNECTION	1/2" NPT (M) 1/2" BSP (M) (Fixed / Adjustable / Swivel)	1/2" NPT (M) 1/2" BSP (M) (Fixed / Adjustable / Swivel)	1/2" NPT (M) 1/2" BSP (M) (Fixed / Adjustable / Swivel)	1/2" NPT (M) 1/2" BSP (M) (Fixed / Adjustable / Swivel)
CASE / ENCLOSURE MATERIAL	AISI 304 SS AISI 316 SS	AISI 304 SS AISI 316 SS	AISI 304 SS AISI 316 SS	AISI 304 SS AISI 316 SS
CAPILLARY ARMOUR	AISI 304 SS / AISI 316 SS AISI 304 SS / AISI 316 SS / PVC (Max length 25 mtrs.)	- - -	AISI 304 SS / AISI 316 SS AISI 304 SS / AISI 316 SS / PVC (Max length 10 mtrs.)	AISI 304 SS / AISI 316 SS AISI 304 SS / AISI 316 SS / PVC (Max length 10 mtrs.)
PROTECTION CLASS	IP 66 as per IS/IEC 60529:2001	IP 66 as per IS/IEC 60529:2001	IP 66 as per IS/IEC 60529:2001	IP 66 as per IS/IEC 60529:2001
REFERENCE STANDARD	EN 13190	EN 13190	EN 13190	EN 13190
WINDOW	Toughened glass	Toughened glass	Plexi / Acrylic	Poly carbonate dome
OPTIONAL EXTRAS	Dual Scale Deg. C / Deg. F Liquid Filled (Glycerin / Silicon) Helium gas filled system External zero adjustments (Optional)	Dual Scale Deg. C / Deg. F Liquid Filled (Glycerin / Silicon) Helium gas filled system External zero adjustments (Optional)	Dual Scale Deg. C / Deg. F Helium gas filled system Magnetic / Inductive contacts CE approved contacts	Dual Scale Deg. C / Deg. F Helium gas filled system Magnetic / Inductive contacts CE approved contacts

Notes:
1. Optional, charges extra, contact factory for details.
2. Other connections, sizes & types (threaded / flanged / thermowell) are available, charges extra, contact factory for details.
3. Refer "Thermometer guideline" for available ranges & showing minimum stem/immersion lengths. Equivalent scales available in °F, °C/°F, °R/°C.
4. Refer "Thermometer guideline" page for further details on the switch ratings.
5. Gauge accuracy CL 1.0 & switching accuracy within CL 5.0

RAJ TECH
www.rajtech-rtc.com

APPLICATIONS

- Liquid & gaseous mediums
- Corrosive environments
- Oil & Gas applications
- Chemical & Petrochemical
- Food & Beverages
- Nuclear power plants

BASIC MODEL	BT (Bottom / Back)	BT (Every Angle)	BT (Elbow Type)	GT (Anti Vibration)
DESCRIPTION	Bi-Metallic Temperature Gauge Sensing Wounded coil of Bimetal Rigid Stem Type	Bi-Metallic Temperature Gauge Sensing Wounded coil of Bimetal Every angle entry External zero adjustment	Bi-Metallic Temperature Gauge Sensing Wounded coil of Bimetal Elbow mounting External zero adjustment	Inert Gas Filled Temperature Gauge Temperature Gauge Rigid Stem Inert Gas Filled Expansion Anti-vibration spring for shock absorb Liquid filled (Glycerin / Silicon oil)
NOMINAL DIAL SIZES	DN50, DN63, DN80, DN100, DN125 & DN150	DN100, DN150	DN100, & DN150	DN100
RANGE	-40...600°C [1]	-40...600°C [1]	-40...600°C [1]	0...+600°C/°F
STEM LENGTH	50...600 mm (Upto 1.5 Meter)	50...600 mm (Upto 1.5 Meter)	50...600 mm (Upto 1.5 Meter)	200 mm, 250 mm & 300 mm
SHEATH DIAMETER	6 mm / 8mm / 10mm / 12 mm Consult factory for non-standard Diameter	6 mm / 8mm / 10mm / 12 mm Consult factory for non-standard Diameter	6 mm / 8mm / 10mm / 12 mm Consult factory for non-standard Diameter	10mm / 12 mm
ACCURACY	CL 1.0 as per EN 13190	CL 1.0 as per EN 13190	CL 1.0 as per EN 13190	CL 1.0 as per EN 13190
MOUNTING STYLES	Bottom Center back	Every angle entry	Center back with elbow	Bottom
PROCESS CONNECTION [2]	1/2" NPT (M) 1/2" BSP (M) (Fixed / Adjustable / Swivel)	1/2" NPT (M) 1/2" BSP (M) (Fixed / Adjustable / Swivel)	1/2" NPT (M) 1/2" BSP (M) (Fixed / Adjustable / Swivel)	1/2" NPT (M) / BSP (M) 3/4" BSP (M) / NPT (M) (Fixed / Adjustable / Swivel)
CASE MATERIAL	AISI 304 SS AISI 316 SS	AISI 304 SS AISI 316 SS	AISI 304 SS AISI 316 SS	AISI 304 SS AISI 316 SS
WINDOW	Toughened glass / Shatterproof	Toughened glass / Shatterproof	Toughened glass / Shatterproof	Toughened glass / Shatterproof
PROTECTION CLASS	IP 68 as per IS/IEC 60529:2001	IP 68 as per IS/IEC 60529:2001	IP 68 as per IS/IEC 60529:2001	IP 68 as per IS/IEC 60529:2001
REFERENCE STANDARD	EN 13190	EN 13190	EN 13190	EN 13190
OPTIONAL EXTRAS	Liquid Filled (Silicon / Dielectric Oil) Dual Scale Deg. C / Deg. F External zero only in Back Conn.	Liquid Filled (Silicon / Dielectric Oil) Dual Scale Deg. C / Deg. F	Liquid Filled (Silicon / Dielectric Oil) Dual Scale Deg. C / Deg. F	Dual Scale Deg. C / Deg. F dials

Notes: 1. Options, charges extra, contact factory for details
2. Other connections & sizes are available, charges extra, contact factory for details.
3. Refer "Thermometer guideline" for available ranges & knowing minimum sensor lengths. Equivalent scales available in °F, °C/°F, °F/°C.

DIAPHRAGM SEAL

THREADED / SANITARY

APPLICATIONS

- Seperation & isolation applications
- Viscous & corrosive media
- High-pressure applications
- High vibration application

BASIC MODEL	DDS	DHM	FDT	TC
DESCRIPTION	Diaphragm Sealed Threaded Threaded Process connection Rigid construction Optional Exotic Diaphragm material	Diaphragm Sealed All welded construction Threaded Process Connection Economical and light weight	Diaphragm sealed Threaded process connection Laser welded diaphragm Ideal for transmitter	Diaphragm sealed Laser welded diaphragm Quick connect / disconnect Ideal for transmitters / Pt. Gauge
TYPE	Direct coupled type	Heavy duty rigid seal	Flushed	Tri-clamp connection
RANGE (COMPATIBLE)	Type DB5 Range : -1 ...70 bar Type DB5 Range : 100 ...250 bar	Type DS3 Range : -1 ...4 bar Type DS3 Range : 6 ...70 bar Type DS6 Range : 100 ...250 bar Type DS0 Range : 250 ...700 bar	1 ...600 bar	4 ...40 bar
DIAPHRAGM	AISI 316L SS (STD) Monel / Hastelloy C Tantalum / Titanium Incoloy / Teflon Silver / Gold	AISI 316L SS (STD) Monel / Hastelloy C	AISI 316L SS	AISI 316L SS
BOTTOM CHAMBER	AISI 316 SS (STD) AISI 316L SS / Monel / Hastelloy C Tantalum / Titanium / Incoloy PP / PTFE / PVC	AISI 316 SS (STD) AISI 316L SS / Monel / Hastelloy C	AISI 316 SS	AISI 316 SS
DIAPHRAGM & BOTTOM CHAMBER PROTECTION (Max temperature 150°C)	PTFE lining - 2 mm on chamber PTFE coating on diaphragm PTFE protection on diaphragm	-	-	-
FILLING FLUIDS (Applicable Temperatures)	Silicon DC 200 [-40°C to 205°C] Silicon DC 550 [10°C to 400°C] Food grade oil [-20°C to 140°C]	Silicon DC 200 [-40°C to 205°C] Silicon DC 550 [10°C to 400°C] Food grade oil [-20°C to 140°C]	Silicon DC 200 [-40°C to 205°C] Silicon DC 550 [10°C to 400°C] Food grade oil [-20°C to 140°C]	Food grade oil [-20°C to 140°C] Glycerine [10°C to 150°C]
PROCESS CONNECTION	½" NPT (M) ½" BSP (M)	½" NPT (M) ½" BSP (M)	¾"...2" size NPT (M) /BSP (M)	1", 1-1/2", & 2" size Tri-clamp connection
CAPILLARY	AISI 304 SS / AISI 316 SS	-	-	
ARMOUR	AISI 304 SS / AISI 316 SS / PVC (Max length 8 mtrs.)	-	-	-
OPTIONAL EXTRAS	NACE MR0175 Metal gasket for high pressure	-	-	Electro Plating Tri-clamp with gasket Bottom mating part

RAJ TECH

Notes: 1. Other connections & sizes are available, charges extra, contact factory for details.
2. Other filling fluids optional, charges extra, contact factory for details.
3. Optional, charges extra, contact factory for details.
4. Gold / silver foils over AISI 316 SS diaphragm.
5. Max pressure up to 14 bar.

DIAPHRAGM SEAL

FLANGED

APPLICATIONS

- Slurry / High viscous & corrosive media
- Seperation & isolation applications
- Polymerisation applications
- High-pressure applications
- Crystallization applications

BASIC MODEL	SDS	DFF	FDRF	FDEF
DESCRIPTION	Sandwich flush diaphragm seal Laser welded diaphragm Optional exotic diaphragm materials	Direct Flushed diaphragm Laser welded diaphragm Optional flushing ring Optional exotic diaphragm materials	Direct flushed diaphragm Laser welded diaphragm Optional exotic diaphragm materials Ideal for smart transmitter	Direct flushed diaphragm Laser welded diaphragm Optional exotic diaphragm materials Ideal for smart transmitter
TYPE	Wafer / pan-cake, flange RF	Flushed	Flushed with Rotaband flange	Extended neck
RANGE (COMPATIBLE)	-1 ...70 bar	-1 ...70 bar	-1 ...70 bar	-1 ...70 bar
DIAPHRAGM[1]	AISI 316L SS Monel / Hastelloy C Tantalum / Titanium Inconel Silver / Gold[4]	AISI 316L SS Monel / Hastelloy C Tantalum / Titanium Inconel	AISI 316L SS Monel / Hastelloy C Tantalum / Titanium Inconel	AISI 316L SS Monel / Hastelloy C Tantalum / Titanium Inconel
DIAPHRAGM CHAMBER (Flange, extension pipe)	AISI 316 SS AISI 304 SS / AISI 316L SS	AISI 316 SS AISI 304 SS / AISI 316L SS	AISI 316 SS AISI 304 SS / AISI 316L SS	AISI 316 SS AISI 304 SS / AISI 316L SS
DIAPHRAGM PROTECTION CHAMBER PROTECTION[2] (Max temperature 150°C)	PTFE coating PTFE coating PTFE protection on diaphragm	PTFE coating on diaphragm	PTFE coating on diaphragm	-
FILLING FLUIDS[3] (Applicable Temperatures)	Silicon DC 200 [-40°C to 205°C] Silicon DC 550 [10°C to 400°C] Food grade oil [-20°C to 140°C]	Silicon DC 200 [-40°C to 205°C] Silicon DC 550 [10°C to 400°C] Food grade oil [-20°C to 140°C]	Silicon DC 200 [-40°C to 205°C] Silicon DC 550 [10°C to 400°C] Food grade oil [-20°C to 140°C]	Silicon DC 200 [-40°C to 205°C] Silicon DC 550 [10°C to 400°C] Food grade oil [-20°C to 140°C]
PROCESS CONNECTION	2" ... 4" flange to ANSI B16.5 Rating 150# ...2500#	1½" ... 4" flange to ANSI B16.5 Rating 150# ...2500#	1½" ... 4" flange to ANSI B16.5 Rating 150# ...2500#	1½" ... 4" flange to ANSI B16.5 Rating 150# ...2500#
CAPILLARY ARMOUR	AISI 304 SS / AISI 316 SS AISI 304 SS / AISI 316 SS / PVC (Max length 6 mtrs.)	AISI 304 SS / AISI 316 SS AISI 304 SS / AISI 316 SS / PVC (Max length 6 mtrs.)	AISI 304 SS / AISI 316 SS AISI 304 SS / AISI 316 SS / PVC (Max length 6 mtrs.)	AISI 304 SS / AISI 316 SS AISI 304 SS / AISI 316 SS / PVC (Max length 6 mtrs.)
OPTIONAL EXTRAS	NACE MR0175 Metal gasket for high pressure Integrated flushing ports	NACE MR0175 Metal gasket / Mating flanges Fastners (Bolt/Nuts)	NACE MR0175 Metal gasket / Mating flanges Fastners (Bolt/Nuts)	NACE MR0175 Urea grade SS wetted parts[1] Metal gasket Fastners (Bolt/Nuts)

Notes
1. Other connections & sizes are available, charges extra, contact factory for details.
2. Other filling fluids optional, charges extra, contact factory for details.
3. Optional, charges extra, contact factory for details.
4. Gold / silver foils over AISI 316 SS diaphragm

RAJ TECH
www.rajtech-fc.com

SERVICE

New or Replace Diaphragm Seals Filling & Calibration of Smart Pressure and Differential Transmitter

DESCRIPTION	SERVICE DESCRIPTION
SERVICES OFFERED	Transmitter assembling with diaphragm seal Diaphragm seal refurbishment & calibration
REASONS	Bulging of diaphragm Diaphragm blown up Diaphragm damaged due to corrosion Dents in the diaphragm Customized requirements of customer/process
FACILITIES	Laser Welding of diaphragms Re-calibration

ACCESSORIES (Pointer pooler)

APPLICATION : For removing pointers from gauges
MOC : AISI 304 SS / MS Nickle plated

PRESSURE TEST PUMP (TESTER)

MODEL : CT1

Hydraulic Pressure tester
Range : 100 bar / 400 bar / 700 bar
1000 bar 1500 bar / 2000 bar
Media : Water / Oil

MODEL : CT2

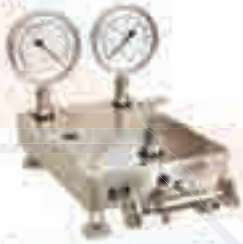

Pneumatic Pressure Tester
Pressure & Vacuum Source Required
Range : -1 to 35 bar
Media : Compress Air

MODEL : CT3
Portable (Mini) Hydraulic Pressure tester
Range : 400 bar / 700 bar
Media : Water / Oil

MATERIAL COMPATIBILITY CHART

Fluid	Suggested Materials	Fluid
Acetylene	SS 316	Acetic Acid
Alcohols	SS 316	Alums
Amines	SS 316	Ammonia Nitrate
Ammonia	SS 316	Arsenic Acid
Benzene	Monel / Hastelloy C	Boric Acid
Carbon dioxide	SS 316	Carbon Monoxide
Chloric acid	PTFE	Brine (Sodium Bicarb)
Chlorine	Hastelloy C	Carbon Tetrachloride
Chocolate	SS 316	Cream
Detergents	SS 316	Dyes
Diesel / Kerosene	SS 316	Diethylene Glycol
Fluorine	SS 316	Formaldehyde
Freon 22	Phosphor Bronze	Epsom salts
Fresh	SS 316	Grease
Fruit juices	SS 316	Gelatin
Fuel oils	Hastelloy C	Hydrogen Peroxide
Gasoline / Jet fuels	SS 316	Hexane
Glues	SS 316	Honey
Hydrochloric acid	Monel / Hastelloy C	Kerosene
Hydrogen sulfide	Hastelloy C	Lacquers
Milk	SS 316	Mercury
Oils	SS 316	Naphtha
Phosphorus	Hastelloy C	Perfume
Potassium chloride	Hastelloy C	Trichloroethylene
Propane	SS 316	Petrolatum
Refineries	Monel / Hastelloy C	Naphthalene
Salt brine	Hastelloy C	Isopropyl Ether
Sea water	Monel	Oleic acid
Sewage services	Hastelloy C / PTFE	Potassium Hydroxide
Soap solutions	SS 304 / Hastelloy C	Soda Ash
Soot service	Monel / Hastelloy C	Crude Oil
Sugar	SS 316	Sulfur Dioxide (dry)
Sulfuric acid	PTFE	Xylene
Transformer oil	PTFE	Urea
Vacuum	SS 316	Toluene (liquid)
Water	SS 316	Turpentine

PRESSURE GAUGE ASSEMBLYING

- Vibrations → + Filled gauge
- Overpressure → + Gauge saver
- Pulsations → + Dampener
- Isolation → + Needle Valve
- Temperature → + Capillary or siphon

NOTES

● = Recommended by us

It is NOT possible to prevent a pulsation dampener or shutter or a gauge saver / needle valve in between the diaphragm seal and the measuring instrument.

The information in this chart has been taken from plate manufacturer sources and is to be used ONLY as a guide in selecting material for appropriate chemical compatibility.

EXCEL undertakes no any responsibility of the data provided in the compatibility chart.

APPLICATIONS

- Hydraulic machines
- Boilers & compressors
- Isolation of instruments
- Heat dispenser for gauges, switches & transmitters
- Cooling tower

BASIC MODEL	GC	SP	CLT	SN
DESCRIPTION	Gauge cock Air vent hole for drain Bakelite cover on handle	Siphon Seamless pipes construction Hydrotested	Cooling tower All SS construction 3 Versatile designs	Snubber / Pulsating dampner Reduces dampening effect of process media
TYPES	2 Way 3 Way	Coil ("O" type) Pigtail "U" type	CLT1 Perforated type CLT2 Fin type CLT3 Capillary type	Adjustable needle
TEMPERATURE RATING	180°C	up to 400°C	400°C depend on length	180°C
PRESSURE RATING	70 bar	As per pipe size 3/8" - 1/2" and Sch 40/80/160/STD	400 bar	400 bar
INSTRUMENT CONNECTION	1/4", 3/8" & ½" BSP / NPT (F)	1/4", 3/8" & ½" BSP / NPT (M) 1/4", 3/8" & ½" BSP / NPT (F) (Welded /Through adaptor /Swivel)	1/4", 3/8" & ½" BSP / NPT (F)	1/4", 3/8" & ½" BSP / NPT (F)
PROCESS CONNECTION	1/4", 3/8" & ½" BSP / NPT (F) 1/4", 3/8" & ½" BSP / NPT (M)	1/4", 3/8" & ½" BSP / NPT (M) Plain / welded end	1/4", 3/8" & ½" BSP / NPT (M)	1/4", 3/8" & ½" BSP / NPT (M)
WETTED PARTS	AISI 316 SS AISI 304 SS	AISI 304 SS AISI 316 SS AISI 316L SS ASTM A 105 (C.S.)	AISI 304 SS AISI 316 SS AISI 316L SS	AISI 304 SS AISI 316 SS AISI 316L SS
OPTIONAL EXTRAS	Oxygen Service Without vent hole	BIR certificate Oxygen Service	Female connections through adaptors	Oxygen Service

Notes: 1. Optional, charges extra, contact factory for details.
2. Other connections & sizes are available, charges extra, contact factory for details.

APPLICATIONS

- For gauges, switches & transmitters
- Pulsation dampener
- Over-pressure protection
- Hydraulic machines

BASIC MODEL	GS	NV1	NV2	BV
SPECIAL FEATURES	Gauge saver Adjustable ranges (field) Diaphragm & Piston operated Overpressure up to 400 bar	Needle valve 1 inlet & 1 outlet Back seating to prevent stem blow out Isolation / flow control	Needle valve 1 inlet & 1 outlet with vent plugs Back seating to prevent stem blow out Block & bleed valve	Ball valve Blow-out proof stem perfect shutoff even after long use
TYPES	Diaphragm (0.6 bar...1.6 bar) Piston (2 bar to 400 bar)	Hard seated	Hard seated	One piece ball stem
MATERIAL OF CONSTRUCTION	AISI 304 SS / AISI 316 SS AISI 316L SS	AISI 304 SS / AISI 316 SS AISI 316L SS	AISI 304 SS / AISI 316 SS AISI 316L SS	AISI 304 SS / AISI 316 SS AISI 316L SS
MOUNTING	Vertical in-line	In-line / direct	In-line / direct	In-line / direct
TEMPERATURE RATING	180°C	240°C	240°C	120°C
PRESSURE RATING	600 bar	400 bar, 700 bar & 1000 bar	400 bar	70 bar
INSTRUMENT CONNECTION	1/4", 3/8" & ½" BSP / NPT (F)	1/4", 3/8" & ½" BSP / NPT (F)	1/4", 3/8" & ½" BSP / NPT (F)	1/4", 3/8" & ½" BSP / NPT (F)
PROCESS CONNECTION	1/4", 3/8" & ½" BSP / NPT (M)	1/4", 3/8" & ½" BSP / NPT (F) 1/4", 3/8" & ½" BSP / NPT (M)	1/4", 3/8" & ½" BSP / NPT (F) 1/4", 3/8" & ½" BSP / NPT (M)	1/4", 3/8" & ½" BSP / NPT (F)
WETTED PARTS	AISI 304 SS / AISI 316 SS AISI 316L SS	AISI 304 SS / AISI 316 SS AISI 316L SS	AISI 304 SS / AISI 316 SS AISI 316L SS	AISI 304 SS AISI 316 SS Stem packing: PTFE / Grafoil
OPTIONAL EXTRAS	Oxygen Service	Oxygen Service	Oxygen Service	-

RAJ TECH

Note: 1. Optional, charges extra, contact factory for details.
2. Other connections & sizes are available, charges extra, contact factory for details.

MANIFOLDS

2-VALVE / 3-VALVE / 5-VALVE

APPLICATIONS

- Liquid & gas services
- High pressure line shut off
- Isolation & drain / vent services
- For mounting pressure instruments
- Isolation & venting of DP type transmitters

TYPES	2 VALVE MANIFOLD	3 VALVE MANIFOLD	5 VALVE MANIFOLD
SPECIAL FEATURES	1 Isolate & 1 Vent valves	2 Isolate & 1 Equalize valves with vent plugs	2 Isolate, 1 Equalize & 2 Vent valves with drain plugs
MODEL / MOUNTING TYPE	**2VMH** : Pipe to Pipe **2VMT** : Flange to Pipe	**3VMH** : Pipe to Pipe **3VMT** : Flange to Pipe **3VMH** : Flange to Flange	**5VMH** : Pipe to Pipe **5VMT** : Flange to Pipe **5VMH** : Flange to Flange
NEEDLE TYPE	Hard seated	Hard seated	Hard seated
MATERIAL OF CONSTRUCTION	AISI 316 SS AISI 304 SS / AISI 316L SS	AISI 316 SS AISI 304 SS / AISI 316L SS	AISI 316 SS AISI 304 SS / AISI 316L SS
TEMPERATURE RATING	240°C	240°C	240°C
PRESSURE RATING	6000 psi	6000 psi	6000 psi
CONNECTION SIZES	1/4" ... 1/2"	1/4" ... 1/2"	1/4" ... 1/2"
THREAD TYPES	NPT (ANSI B 1.20.1) BSP (BS 2779, ISO 228/1) BSPT (BS 21, ISO 7/1)	NPT (ANSI B 1.20.1) BSP (BS 2779, ISO 228/1) BSPT (BS 21, ISO 7/1)	NPT (ANSI B 1.20.1) BSP (BS 2779, ISO 228/1) BSPT (BS 21, ISO 7/1)
CONNECTIONS (Instrument x Process)	Female x Female Female x Flange	Female x Female Female x Flange Flange x Flange	Female x Female Female x Flange Flange x Flange
STEM PACKING	PTFE Grafoil	PTFE Grafoil	PTFE Grafoil
OPTIONAL EXTRAS	Oxygen service Mounting brackets	Oxygen service Mounting brackets	Oxygen service Mounting brackets

H TYPE (Pipe to Pipe)

T TYPE (Flange to Pipe)

H TYPE (Flange to Flange)

APPLICATIONS

- Power & Utilities
- Oil & gas application
- Chemical & petrochemical
- Water, waste-water treatment
- Bearing temperature measurement

BASIC MODEL	RTD01	RTD02	RTD03	RTD04
DESCRIPTION	RTD sensor Fixed connection Mineral insulated Exchangeable insert Spring loaded design	RTD sensor Adjustable connection Mineral insulated Exchangeable insert Spring loaded design	RTD sensor nipple extension Mineral insulated Exchangeable insert Spring loaded design	RTD sensor N-U-N extension Mineral insulated Exchangeable insert Spring loaded design
CONNECTION TYPE	Fixed	Adjustable	Nipple	Nipple-Union-Nipple
SENSOR (Simplex/Duplex)	Pt-100 Pt-500, Pt-1000	Pt-100 Pt-500, Pt-1000	Pt-100 Pt-500, Pt-1000	Pt-100 Pt-500, Pt-1000
RANGE	-200°C up to 400°C -200°C up to 600°C	-200°C up to 400°C -200°C up to 600°C	-200°C up to 400°C -200°C up to 600°C	-200°C up to 400°C -200°C up to 600°C
ACCURACY	Class B Class A	Class B Class A	Class B Class A	Class B Class A
SHEATH DIAMETER	6 mm / 6.35 mm (1/4") 3 mm to 12 mm	6 mm / 6.35 mm (1/4") 3 mm to 12 mm	6 mm / 6.35 mm (1/4") 3 mm to 8 mm	6 mm / 6.35 mm (1/4") 3 mm to 8 mm
SHEATH MATERIAL	AISI 304 SS / AISI 316 SS AISI 316L SS / AISI 316Ti SS	AISI 304 SS / AISI 316 SS AISI 316L SS / AISI 316Ti SS	AISI 316 SS AISI 316L SS / AISI 316Ti SS	AISI 316 SS AISI 316L SS / AISI 316Ti SS
ENCLOSURE PROTECTION	IP 65 / 67 / 68 ABS Plastic Flameproof / Ex-proof	IP 65 / 67 / 67 ABS Plastic Flameproof / Ex-proof	IP 65 IP 67 / IP 68 Flameproof / Ex-proof	IP 65 IP 67 / IP 68 Flameproof / Ex-proof
ENCLOSURE MATERIAL	Die-cast aluminum AISI 304 SS AISI 316 SS	Die-cast aluminum AISI 304 SS AISI 316 SS	Die-cast aluminum AISI 304 SS AISI 316 SS	Die-cast aluminum AISI 304 SS AISI 316 SS
PROCESS CONNECTION	1/4" BSP (M) / 1/4" NPT (M) 3/8" BSP (M) / 3/8" NPT (M) 1/2" BSP (M) / 1/2" NPT (M)	1/4" BSP (M) / 1/4" NPT(M) 3/8" BSP(M) / 3/8" NPT (M) 1/2" BSP (M) / 1/2" NPT (M)	1/2" BSP (M) 1/2" NPT (M)	1/2" BSP (M) 1/2" NPT (M)
REFERENCE STANDARD	IEC 751 / DIN 43760	IEC 751 / DIN 43760	IEC 751 / DIN 43760	IEC 751 / DIN 43760
APPROVAL	CE Certified	CE Certified	CE Certified	CE Certified
OPTIONAL EXTRAS	Various cable glands Transmitter 4...20mA output Various Compensating cables	Various cable glands Transmitter 4...20mA output Various Compensating cables	Various cable glands Transmitter 4...20mA output Various Compensating cables	Various cable glands Transmitter 4...20mA output Various Compensating cables

RTD tolerence chart

Temperature °C	Resistance Value Ω	Reference DIN IEC 751 Class A °C (Ω)	Class B °C (Ω)
-200	18.52	±0.55 (±0.24)	±1.3 (±0.56)
-100	60.26	±0.35 (±0.14)	±0.8 (±0.32)
0	100.00	±0.15 (±0.06)	±0.3 (±0.12)
100	138.51	±0.35 (±0.13)	±0.8 (±0.30)
200	175.86	±0.55 (±0.20)	±1.3 (±0.48)
300	212.05	±0.75 (±0.27)	±1.6 (±0.64)
400	247.09	±0.95 (±0.33)	±2.3 (±0.79)
500	280.98	±1.15 (±0.38)	±2.6 (±0.88)
600	313.71	±1.35 (±0.43)	±3.3 (±1.06)
800	378.64	±1.75 (±0.48)	±4.6 (±1.3)

Refer pages 26...29 for Thermowells

Notes
1. With simplex element only.
2. Optional, charges extra, contact factory for details.
3. Other connections & sizes are available, charges extra, contact factory for details.
4. Applicable for 3 mm & 6 mm sheath diameters.
5. Minimum earthing length = 30 mm.

APPLICATIONS

- Nuclear applications
- Autoclave applications
- Steel & Power applications
- Power & Utility applications
- Pharmaceutical applications
- Turbines / Bearing Temperature

BASIC MODEL	RTD05	RTD06	RTD07	RTD08
DESCRIPTION	RTD sensors Transition joint type Mineral insulated Crimp-on-pot sealed ISO threaded pot Adjustable / fixed connection	RTD sensor Plug & Jack Conn. Mineral insulated OMEGA / LEMO connectors Simplex configuration Adjustable connection	RTD sensor spring loaded Mineral insulated Ceramic block with Ni-plated / Silver plated terminals	RTD sensor Flexible Cable Various designs of Hot ends Bearing temperature RTD
COLD END TERMINATION	Compensating cable	Plug & Jack	Spring loaded terminal block	Compensating cable
SENSOR (Simplex/Duplex)	Pt-100 Pt-500, Pt-1000	Pt-100 Pt-500, Pt-1000	Pt-100 Pt-500, Pt-1000	Pt-100 Pt-500, Pt-1000
RANGE	-200°C up to 400°C -200°C up to 600°C	-200°C up to 400°C -200°C up to 600°C	-200°C up to 400°C -200°C up to 600°C	-200°C up to 400°C
ACCURACY	Class B Class A	Class B Class A	Class B Class A	Class B Class A
SHEATH DIAMETER	6 mm / 6.35 mm (1/4") 3 mm/3.2 mm to 10 mm	6 mm / 6.35 mm (1/4") 3 mm, 8 mm	6 mm / 6.35 mm (1/4") 3 mm, 8 mm	3 mm/3.2 mm 6 mm / 6.35 mm (1/4")
SHEATH MATERIAL	AISI 304 SS / AISI 316 SS AISI 316L SS / AISI 316Ti SS	AISI 304 SS / AISI 316 SS AISI 316L SS / AISI 316Ti SS	AISI 304 SS / AISI 316 SS AISI 316L SS / AISI 316Ti SS	AISI 304 SS / AISI 316 SS AISI 316L SS
PROCESS CONNECTION	1/4" BSP (M) / 1/4" NPT (M) 3/8" BSP (M) / 3/8" NPT (M) 1/2" BSP (M) / 1/2" NPT (M)	1/4" BSP (M) / 1/4" NPT (M) 3/8" BSP (M) / 3/8" NPT (M) 1/2" BSP (M) / 1/2" NPT (M)	-	-
REFERENCE STANDARD	IEC 751 / DIN 43760	IEC 751 / DIN 43760	IEC 751 / DIN 43760	IEC 751 / DIN 43760
OPTIONAL EXTRAS	PTFE/PTFE cables PTFE/PTFE/SS braided cables PTFE/SS/PTFE braided cables PTFE/PTFE-Silicon cables	Various types of connectors Female connector with various types of compensating cables	Terminal block PCD 33 mm Terminal block PCD 46 mm Transmitter 4 - 20mA output	PTFE/PTFE cables PTFE/PTFE/SS braided cables FG/FG/SS braided cables PTFE/PTFE-Silicon cables

Refer pages 28 - 29 for Thermowells.

Notes: 1. With simplex element only.
2. Optional, charges extra, contact factory for details.
3. Other connections & sizes are available, charges extra, contact factory for details.
4. Applicable for 3 mm & 6 mm sheath diameter.
5. Minimum sensing length = 50 mm.

RAJ TECH
www.rajtech.co.in

APPLICATIONS

- Cement Industries
- Air & flue gas applications
- Steel & Power applications
- Refinery & Petrochemicals Plants
- Pharmaceutical, Food & Beverages
- Stator winding of motors & generators
- Surface measurement in refractory vessels

BASIC MODEL	RTD09	RTD10	RTD11	RTD12
DESCRIPTION	RTD sensor Weld-Pad conn. Mineral insulated Exchangeable insert Spring loaded design	RTD sensor Threaded / flanged connection Mineral insulated element Spring loaded design Fixed / adjustable connection	RTD sensor Tri-clover connection Mineral insulated Exchangeable insert Spring loaded design	RTD sensor Rectangular, flat & laminated Electrically shielded sensor High dielectric constant
CONNECTION TYPE	Weld-pad	Threaded / Flanged	Sanitary (Tricloven)	-
SENSOR[1] (Simplex/Duplex)	Pt-100 Pt-500, Pt-1000	Pt-100 Pt-500, Pt-1000	Pt-100 Pt-500, Pt-1000	Pt-100 Pt-500, Pt-1000
RANGE[2]	-200°C up to 400°C -200°C up to 600°C	-200°C up to 400°C -200°C up to 600°C	-200°C up to 400°C -200°C up to 600°C	-200°C up to 400°C -200°C up to 600°C
ACCURACY[2]	Class B Class A	Class B Class A	Class B Class A	Class B Class A
SHEATH DIAMETER	6 mm / 6.35 mm (1/4") 8 mm	6 mm / 6.35 mm (1/4") 8 mm / 8 mm	6 mm / 6.35 mm (1/4") 8 mm / 8 mm	7 x 50 x 1.5 mm (Min) 25 x 450 x 3.5 mm (Max)
SHEATH MATERIAL (WELD PAD)	AISI 316 SS AISI 316L SS	AISI 316 SS AISI 316L SS	AISI 316 SS AISI 316L SS	Fiber Glass
ENCLOSURE PROTECTION	IP 65 IP 67 / IP 68 Flameproof / Ex-proof	IP 65 IP 67 / IP 68 Flameproof / Ex-proof	IP 65 IP 67 / IP 68 Flameproof / Ex-proof	IP 65
ENCLOSURE MATERIAL	Die-cast aluminum AISI 304 SS AISI 316 SS	Die-cast aluminum AISI 304 SS AISI 316 SS	Die-cast aluminum AISI 304 SS AISI 316 SS	-
PROCESS CONNECTION[3]	Weld Pad (25 x 25 x 50) Weld Pad (25 x 25 x 100) Weld Pad (50 x 50 x 100)	1/2" BSP / NPT (M) 3/4" BSP / NPT (M) 1½" RF 150# ANSI B16.5	1.5" 1" 2"	-
PROTECTION TUBE[3]	-	Various Sizes	-	-
REFERENCE STANDARD	IEC 751 / DIN 43760	IEC 751 / DIN 43760	IEC 751 / DIN 43760	IEC 751 / DIN 43760
APPROVAL	CE certified	CE certified	CE certified	-
OPTIONAL EXTRAS	Surface / Bracket mounting 2" Inlet Pipe mounting Various cable glands Transmitter 4...20mA output Various compensating cables	Various cable glands Transmitter 4...20mA output Various compensating cables	Various cable glands Transmitter 4...20mA output Various compensating cables Electro-plating Tri-clamp with Gasket Bottom mating part	PTFE/PTFE cables PTFE/PTFE/Silicon cables

Refer pages 28...29 for Thermowells

Notes: 1. With simplex element only
2. Optional, charges extra, contact factory for details
3. Other connections & sizes are available, charges extra, contact factory for details

APPLICATIONS

- Power & Utilities
- Oil & gas application
- Chemical & petrochemical
- Water, waste-water treatment
- Bearing temperature measurement

BASIC MODEL	TC01	TC02	TC03	TC04
DESCRIPTION	Thermocouple sensor Fixed Mineral insulated Exchangeable insert Spring loaded design	Thermocouple sensor Adjustable Mineral insulated Exchangeable insert Spring loaded design	Thermocouple sensor Nipple Mineral insulated Exchangeable insert Spring loaded design	Thermocouple sensor N-U-N Mineral Insulated Exchangeable insert Spring loaded design
CONNECTION TYPE	Fixed	Adjustable	Nipple	Nipple-Union-Nipple
SENSOR[1] (Sensor Option)	K J, E, T, N, R, S, B	K J, E, T, N, R, S, B	K J, E, T, N, R, S, B	K J, E, T, N, R, S, B
ACCURACY[2]	Standard Special	Standard Special	Standard Special	Standard Special
HOT END TERMINATION	Ungrounded Grounded	Ungrounded Grounded	Ungrounded Grounded	Ungrounded Grounded
SHEATH DIAMETER	6 mm / 6.35 mm (1/4") 3 mm, 4.8 mm, 8 mm 12.7 mm, 15mm, 19mm & 21.3 mm	6 mm / 6.35 mm (1/4") 3 mm, 4.8 mm, 8 mm & 12.7 mm (1/2")	6 mm / 6.35 mm (1/4") 3 mm, 4.8 mm, 8 mm & 12.7 mm (1/2")	6 mm / 6.35 mm (1/4") 3 mm, 4.8 mm, 8 mm & 12.7 mm (1/2")
SHEATH MATERIAL	AISI 316 SS AISI 310 SS Inconel 600 / Inconel 800	AISI 316 SS AISI 310 SS Inconel 600 / Inconel 800	AISI 316 SS AISI 310 SS Inconel 600 / Inconel 800	AISI 316 SS AISI 310 SS Inconel 600 / Inconel 800
ENCLOSURE PROTECTION[3]	IP 65 IP 67 / IP 68 Flameproof & Ex-proof	IP 65 IP 67 / IP 68 Flameproof & Ex-proof	IP 65 IP 67 / IP 68 Flameproof & Ex-proof	IP 65 IP 67 / IP 68 Flameproof & Ex-proof
ENCLOSURE MATERIAL	Die-cast aluminium AISI 304 SS AISI 316 SS	Die-cast aluminium AISI 304 SS AISI 316 SS	Die-cast aluminium AISI 304 SS AISI 316 SS	Die-cast aluminium AISI 304 SS AISI 316 SS
PROCESS CONNECTION[4]	3/8" BSP (M) / NPT (M) 1/2" BSP (M) / NPT (M) 3/4" BSP (M) / NPT (M)	1/4" BSP (M) / NPT(M) 3/8" BSP (M) / NPT(M) 1/2" BSP (M) / NPT(M)	1/2" BSP (M) 1/2" NPT (M)	1/2" BSP (M) 1/2" NPT (M)
REFERENCE STANDARD	IEC 548.2 / ANSI MC 96.1	IEC 548.2 / ANSI MC 96.1	IEC 548.2 / ANSI MC 96.1	IEC 548.2 / ANSI MC 96.1
APPROVAL	CE certified	CE certified	CE certified	CE certified
OPTIONAL EXTRAS	Various cable glands Transmitter 4...20mA output Various Extension cables	Various cable glands Transmitter 4...20mA output Various Extension cables	Various cable glands Transmitter 4...20mA output Various Extension cables	Various cable glands Transmitter 4...20mA output Various Extension cables

Refer pages 26...29 for Thermowells.

Notes
1. Check guidance chart before selecting the element type.
2. Optional, charges extra, contact factory for details.
3. Other connections & sizes are available, charges extra, contact factory for details.
4. Applicable for 3 mm, 4.8 mm & 6 mm sheath diameters.

RAJ TECH
www.rajtech-fb.com

APPLICATIONS

- Plastic industries
- Reactor application
- Moulding Machines
- Aero-space application
- Pharmaceutical applications
- Water, waste-water treatment
- Spares / replacement assembly
- Steel, Power & Nuclear applications

BASIC MODEL	TC05	TC06	TC07	TC08
DESCRIPTION	Thermocouple sensor Bare Conductor termination Mineral insulated High temperature application	Thermocouple sensor Transition Mineral insulated Crimp-on-pot sealed ISO threaded pot Adjustable / fixed connection	Thermocouple sensor Plug & Jack Connection Mineral insulated OMEGA / LEMO connectors Simplex configuration	Thermocouple sensor Spring Loaded Design Mineral insulated Ceramic block with Ni-plated / Silver plated terminals
COLD END TERMINATION	Bare conductors	Extension cable	Plug & Jack	Spring loaded terminal block
SENSOR[1]	K	K	K	K
(Simplex/Duplex)	J, E, T, N	J, E, T, N	J, E, T, N	J, E, T, N
ACCURACY[1]	Standard Special	Standard Special	Standard Special	Standard Special
HOT END TERMINATION	Ungrounded Grounded	Ungrounded Grounded	Ungrounded Grounded	Ungrounded Grounded
SHEATH DIAMETER	6 mm / 6.35 mm (1/4") 3 mm, 4.8 mm, 8 mm & 12.7 mm (1/2")	6 mm / 6.35 mm (1/4") 3 mm, 4.8 mm, 8 mm & 12.7 mm (1/2")	3 mm 1 mm, 1.5 mm, 3 mm, 6mm, 8mm	6 mm / 6.35 mm (1/4") 3 mm, 4.8 mm, 8 mm & 12.7 mm (1/2")
SHEATH MATERIAL	AISI 316 SS AISI 310 SS Inconel 600 / Inconel 800	AISI 316 SS AISI 310 SS Inconel 600 / Inconel 800	AISI 316 SS AISI 310 SS Inconel 600 / Inconel 800	AISI 316 SS AISI 316 SS Inconel 600 / Inconel 800
PROCESS CONNECTION[2]	-	1/4" BSP (M) / NPT (M)[3] 3/8" BSP (M) / NPT (M) 1/2" BSP (M) / NPT (M)	1/4" BSP (M) / NPT (M)[3] 3/8" BSP (M) / NPT (M) 1/2" BSP (M) / NPT (M)	-
REFERENCE STANDARD	IEC 548.2 / ANSI MC 96.1	IEC 548.2 / ANSI MC 96.1	IEC 548.2 / ANSI MC 96.1	IEC 548.2 / ANSI MC 96.1
OPTIONAL EXTRAS	Ceramic Terminal Block	PTFE/PTFE cables PTFE/PTFE/SS braided cables FG/FG/SS braided cables	Various types of connectors Female connector with various types of Extension cables	Terminal block PCD 33 mm Terminal block PCD 46 mm Transmitter 4 – 20mA output

Refer pages 26 – 29 for Thermowells.

Notes
1. Check guidance chart before selecting the element type.
2. Optional, charges extra, contact factory for details.
3. Other connections & sizes are available, charges extra, contact factory for details.
4. Applicable for 3 mm, 4.8 mm & 8 mm sheath diameters.

APPLICATIONS

- Textile industries
- Clean room validation
- Blow moulding machine
- Limit space applications
- Injection moulding machine
- Trust plates & motor winding
- Plastic & packing industries
- Spares / replacement assembly

BASIC MODEL	TC09	TC10	TC11	TC12
DESCRIPTION	Thermocouple sensor Economical Version Beaded Element	Thermocouple sensor Bayonet Fitting Spring loaded design Flexible Cable	Thermocouple sensor Flexible Fast response time With spring loaded mounting and retaining thrust washer	Thermocouple Spring Loaded Provide with SS Base plate for mounting the temperature Transmitter
COLD END TERMINATION	Ceramic terminal block	Extension cable	Extension cable	SS base plate
SENSOR*	K	J	K	K
(Simplex/Duplex)	J, E, T, N, R, S, B	K	T	J, E, T, N, R, S, B
ACCURACY*	Standard Special	Standard Special	Standard Special	Standard Special
HOT END TERMINATION	Exposed	Grounded / Ungrounded	Ungrounded Grounded	Ungrounded Grounded
SHEATH DIAMETER*	12 mm 8 mm	6 mm / 6.35 mm (1/4") 3 mm, 4.8 mm, 8 mm & 12.7 mm (1/2")	3 mm 6mm, 8 mm	6 mm / 6.35 mm (1/4") 3 mm, 4.8 mm, 8 mm & 12.7 mm (1/2")
SHEATH MATERIAL	Ceramic Insulators (KER610 / KER710)	AISI 316 SS	AISI 316 SS	AISI 316 SS AISI 316L SS Inconel 600 / Incone 800
PROCESS CONNECTION	-	In various assemblies	-	
REFERENCE STANDARD	IEC 548.2 / ANSI MC 96.1	IEC 548.2 / ANSI MC 96.1	IEC 548.2 / ANSI MC 96.1	IEC 548.2 / ANSI MC 96.1
OPTIONAL EXTRAS	Terminal head	PTFE/PTFE cables PTFE/PTFE/SS braided cables FG/FG/SS braided cables	PTFE/PTFE cables PTFE/PTFE/SS braided cables FG/FG/SS braided cables	Transmitter 4 - 20mA output

RAJ TECH

Refer pages 28 - 29 for Thermowells

Notes
1. Check guidance chart before selecting the element type.
2. Optional, charges extra, contact factory for details.
3. Other connections & sizes are available, charges extra, contact factory for details.

APPLICATIONS

- Air & flue gas applications
- Steel & Power applications
- Glass & Cement industries
- Refinery & Petrochemicals Plants
- Pharmaceutical, Food & Beverages
- Stator winding of motors & generators
- Surface measurement in refractory vessels
- Skin temperature measurement of Heater Tube

BASIC MODEL	TC13	TC14	TC15	TC16
SPECIAL FEATURES	Thermocouple sensor Ceramic Insulator Single / Double protecting tube Exchangeable insert KER710 / KER610 Adjustable / Fixed Flange	Thermocouple sensor Ceramic Insulator Single / Double protecting tube Exchangeable insert KER710 Material Adjustable / Fixed Connection	Thermocouple sensor Weld-Pad connection Mineral insulated Exchangeable insert Spring loaded design	Thermocouple sensor Protecting Tube Mineral insulated element Bonded type element Spring loaded design Fixed / adjustable connection
CONNECTION TYPE	Flanged	Threaded	Weld-pad	Threaded / Flanged
SENSOR (Simplex/Duplex)	R K, N, S, B	R K, N, S, B	K J, E, T, N	K J, E, T, N, R, S, B
ACCURACY	Standard Special	Standard Special	Standard Special	Standard Special
HOT END TERMINATION	Ungrounded Grounded	Ungrounded Grounded	Ungrounded Grounded	Ungrounded Grounded
SHEATH DIAMETER (Other optional sizes)	26 AWG 25 AWG, 24 AWG	26 AWG 25 AWG, 24 AWG	6 mm / 6.35 mm (1/4") 3 mm, 4.8 mm, 8 mm & 12.7 mm (1/2")	6 mm / 6.35 mm (1/4") 3 mm, 4.8 mm, 8 mm, 12.7 mm 15 mm, 19 mm & 21.3 mm
SHEATH MATERIAL (WELD PAD)	Ceramic (KER610 / KER710)	Ceramic (KER610 / KER710)	AISI 316 SS AISI 310 SS Inconel 600 / Inconel 800	AISI 316 SS AISI 310 SS Inconel 600 / Inconel 800
ENCLOSURE PROTECTION	IP 65 IP 67 / IP 68 Flameproof & Ex-proof	IP 65 IP 67 / IP 68 Flameproof & Ex-proof	IP 65 IP 67 / IP 68 Flameproof & Ex-proof	IP 65 IP 67 / IP 68 Flameproof & Ex-proof
ENCLOSURE MATERIAL	Die-cast aluminum AISI 304 SS AISI 316 SS	Die-cast aluminum AISI 304 SS AISI 316 SS	Die-cast aluminum AISI 304 SS AISI 316 SS	Die-cast aluminum AISI 304 SS AISI 316 SS
PROCESS CONNECTION	1½" ... 4" flange to ANSI B16.5 Rating 150# ... 2500#	3/4" NPT (M) ... 1" NPT (M) 3/4" BSP (M) ... 1" BSP (M)	Weld Pad (25 x 25 x 50) Weld Pad (25 x 25 x 100) Weld Pad (50 x 50 x 100)	3/4" NPT (M) ... 1" NPT (M) 1½" ... 4" flange to ANSI B16.5 Rating 150# ... 2500#
PROTECTION TUBE	Φ12 x 2 mm + Φ20 x 2.5 mm Φ15 x 2.5 mm + Φ24 x 3 mm (INNER + OUTER)	Φ12 x 2 mm + Φ20 x 2.5 mm Φ15 x 2.5 mm + Φ24 x 3 mm (INNER + OUTER)	-	3/8" Sch 40 ... 3/4" Sch 80
REFERENCE STANDARD	IEC 548.2 / ANSI MC 96.1	IEC 548.2 / ANSI MC 96.1	IEC 548.2 / ANSI MC 96.1	IEC 548.2 / ANSI MC 96.1
APPROVAL	CE certified	CE certified	CE certified	CE certified
OPTIONAL EXTRAS	Various cable glands Transmitter 4 ... 20mA output Various Extension cables Protection tube in Kanthal / Silicon carbide / Silicon nitride bonded	Various cable glands Transmitter 4 ... 20mA output Various Extension cables Protection tube in Kanthal / Silicon carbide / Silicon nitride bonded	Surface / Bracket mounting 2" Yoke / Pipe mounting Various cable glands Transmitter 4 ... 20mA output Various Extension cables	Various cable glands Transmitter 4 ... 20mA output Various Extension cables Protection tubes coated with Tungsten carbide / Stellite / Ceramic

Refer pages 28 ... 29 for Thermowells

Notes: 1. Check guidance chart before selecting the element type.
2. Optional, charges extra, contact factory for details.
3. Other connections & sizes are available, charges extra, contact factory for details.

APPLICATIONS

- Air & flue gas
- Tanks & vessels
- Oil & Gas applications
- Corrosive environments
- Power & Steel industries
- HVAC, Air filters & utilities
- On-shore/Off-shore application

BASIC MODEL	TW 3	TW 1	TW 2	TW 5
DESCRIPTION	Fabricated Thermowell	Solid bar-stock Thermowell	Fabricated Thermowell	Solid bar-stock Thermowell
CONNECTION TYPE	Threaded	Threaded	Flanged	Flanged
SHANK FORM	Straight	Straight Straight reduced tip Partial taper Full taper	Straight	Straight Straight reduced tip Partial taper Full taper
MATERIAL OF CONSTRUCTION*	SS 304 / 310 / 316 / 316L	SS 304 / 310 / 316 / 316L / 446 Inconel 600 / 800 / 625 / 825 Monel, Hastelloy C, Titanium Alloy 20, ASTM A105	SS 304 / 310 / 316 / 316L	SS 304 / 310 / 316 / 316L / 446 Inconel 600 / 800 / 625 / 825 Monel, Hastelloy C, Titanium Alloy 20, ASTM A105
INSTRUMENT CONNECTION PROCESS CONNECTION*	3/8" NPT (F)...2" NPT (F) 3/8" BSP (F)...2" BSP (F) 3/8" NPT (M)...2" NPT (M) 3/8" BSP (M)...2" BSP (M)	3/8" NPT (F)...2" NPT (F) 3/8" BSP (F)...2" BSP (F) 3/8" NPT (M)...2" NPT (M) 3/8" BSP (M)...2" BSP (M)	1/2" NPT (F)...1" NPT (F) 1/2" BSP (F)...1" BSP (F) 1½"...4" flange to ANSI B16.5 Rating 150#...2500#	1/2" NPT (F)...1" NPT (F) 1/2" BSP (F)...1" BSP (F) 1½"...4" flange to ANSI B16.5 Rating 150#...2500#
BORE SIZES	7x10 mm, 7x12 mm, 9x14 mm 10x12 mm, 12x14 mm 12x16 mm Or pipe 1/8"...1/2", Sch 40...160	6.6 mm / 7 mm 8 mm, 9.6 mm, 11 mm & 13 mm	1/8"...1/2", Sch 40...160	6.6 mm / 7 mm 9 mm, 9.6 mm, 11 mm & 13 mm
HEAD TYPE	Hex	Hex	Round	Round
EXTENSION LENGTH*	25 mm	50 mm	50 mm	50 mm
INSERTION LENGTH* (Below thread/flange)	Up to 1000 mm	1000 mm (Max.) 300 mm (Max. for Hex type)	Up to 1000 mm	1000 mm (Max.)
OPTIONAL EXTRAS	-	Wake Frequency Calculation Plug & chain in AISI 304 SS	Plug & chain in AISI 304 SS Shank lining & coating Sleeve on shank & flange RF	Shank lining & coating Overlay of flange RF Sleeve on shank & flange RF Wake Frequency Calculation

RAJ TECH
www.rajtech-rtc.com

Notes
1. Check guidelines chart before selecting the element type.
2. Other connections & sizes are available, charges extra, contact factory for details.
3. Optional, charges extra, contact factory for details.

THERMOWELL

CUSTOMIZED

APPLICATIONS

- Food & beverages
- Oil & Gas applications
- Corrosive environments
- Power & Steel industries
- Sterile process industries
- On-shore/Off-shore application
- Biochemical & pharmaceutical industries

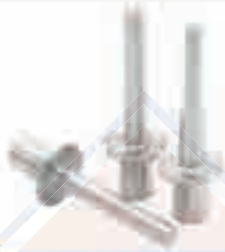

BASIC MODEL	TW 6	TW 4	TW 7	TW 8
DESCRIPTION	Van-stone design Thermowell Single piece forged drilled	Sanitary design Thermowell Solid bar-stock drilled	Weld-in / Socket-weld Thermowell Solid bar-stock drilled	Partial bar-stock Thermowell Flanged process connection
CONNECTION TYPE	Flange RF	Sanitary, Tri-clover	Weld-in / Socket-weld	Flanged
SHANK FORM	Straight Straight reduced tip Partial taper Full taper	Straight Straight reduced tip Partial taper Full taper	Straight Straight reduced tip Partial taper Full taper	Straight Straight reduced tip Partial taper
MATERIAL OF CONSTRUCTION	AISI 316 SS / AISI 316L SS Inconel 600 / Inconel 625 Monel 400 / Hastelloy C	AISI 316 SS AISI 304 SS AISI 316L SS	AISI 316 SS / AISI 316L SS ASTM F11 / F22 / F91 Inconel 600 / Inconel 625	SS 304 / 310 / 316 / 316L / 446 Inconel 690 / 800 / 625 / 825 Monel, Hastelloy C, Titanium Alloy 20, ASTM A105
INSTRUMENT CONNECTION	1/2" NPT (F) 1/2" BSP (F)	3/8" NPT (F)...3/4" NPT (F) 3/8" BSP (F)...3/4" BSP (F)	1/2" NPT (F)...1" NPT (F) 1/2" BSP (F)...1" BSP (F)	1/2" NPT (F)...1" NPT (F) 1/2" BSP (F)...1" BSP (F)
PROCESS CONNECTION	1" ANSI flange RF 1½" ANSI flange RF 2" ANSI flange RF	1½" Sanitary seal 2" Sanitary seal 2½" Sanitary seal	As per customer requirement	1½"...4" flange to ANSI B16.5 Rating 150#...2500#
BORE SIZES	6.6 mm / 7 mm 9 mm, 9.6 mm, 11 mm & 13 mm	6.6 mm / 7 mm 9 mm, 9.6 mm, 11 mm & 13 mm	6.6 mm / 7 mm 9 mm, 9.6 mm, 11 mm & 13 mm	6.6 mm / 7 mm 9 mm, 9.6 mm, 11 mm & 13 mm
HEAD TYPE	Round	Round with spanner slots	Round	Round
EXTENSION LENGTH*	45 mm	55 mm	50 mm	50 mm
INSERTION LENGTH* (Below thread/flange)	1000 mm (Max.)	1000 mm (Max.)	1000 mm (Max.)	Up to 1000 mm
SPECIAL OPTIONS	Electro polishing Wake frequency calculation Cover flange (Lap joint type)	Electro polishing Tri-clamp with Gasket	Plug & chain in AISI 304 SS Wake frequency calculation	Shank long & casting Overlay of flange RF Sleeve on shank & flange RF

Notes: 1. Check guidance chart before selecting the element type.
2. Other connections & sizes are available, charges extra, contact factory for details.
3. Optional, charges extra, contact factory for details.

RAJ TECH

APPLICATIONS

- Filtration plants
- Food & beverages
- Railways & turbines
- Fertilizers & cement
- Paper & pulp industries
- Chemical & petro-chemical

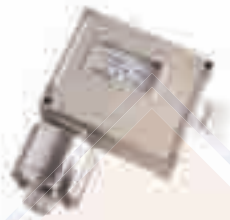

BASIC MODEL	EDS	EPS	EHS	ETS
SPECIAL FEATURES	Enclosure Protection : IP 67 Fix/Adjustable differential Field adjustable set point with internal/external locking Various types of switch+ Indicating scale	Differential pressure switch Enclosure Protection : IP 67 Fix/Adjustable differential Field adjustable set point with internal/external locking Various types of switch Indicating scale	Enclosure Protection : IP 67 Fix/Adjustable differential Field adjustable set point with internal/external locking Various types of switch Indicating scale	Temperature Switch Inert gas filled expansion Various type of Microswitches Weatherproof / Ex-proof versions
SENSING ELEMENT	Diaphragm, 316 SS Monel / Hastelloy C / Teflon	Diaphragm, 316 SS Monel / Hastelloy C / Teflon	Piston, 316 SS	Sensor bulb, 316 SS
WETTED PARTS (Bottom chamber)	316 SS 316L SS / Monel / Teflon Hastelloy C	316 SS 316L SS / Monel / Teflon Hastelloy C	316 SS	316 SS
RANGE	-20mbar... 160 bar	5 mbar... 25 bar	10... 400 bar	5... 400°C
REPRODUCIBILITY	CL 1.0 CL 0.5	CL 1.0 CL 0.5	CL 2.0	CL 3.0
SWITCH TYPE	Micro switch 1 SPDT / 2 SPDT / DPDT	Micro switch 1 SPDT / 2 SPDT / DPDT	Micro switch 1 SPDT / 2 SPDT / DPDT	Micro switch 1 SPDT / 2 SPDT / DPDT
SWITCH RATING	General : 15A / 250 VAC or 3A / 24 VDC	General : 15A / 250 VAC or 3A / 24 VDC	General : 15A / 250 VAC or 3A / 24 VDC	General : 15A / 250 VAC or 1A / 24 VDC
ENCLOSURE MATERIAL	Die-cast Aluminium	Die-cast Aluminium	Die-cast Aluminium	Die-cast Aluminium
ENCLOSURE PROTECTION	IP 67	IP 67	IP 67	IP 67
PROCESS CONNECTION	1/4" BSP (F)	1/4" BSP (F) x 2 Nos	1/4" BSP (F)	3/8" BSP (M)
REFERENCE STANDARD	BS 6134	BS 6134	BS 6134	-
APPROVAL	Type test to BS 6134	Type test to BS 6134	Type test to BS 6134	-
OPTIONAL EXTRAS	SS Cable gland, double compression, weatherproof Brass Cable gland, double compression, weatherproof			
	Plug in / DIN connector Wall mounting bracket 2" pipe mounting bracket NACE MR0175	Plug in / DIN connector Wall mounting bracket 2" pipe mounting bracket NACE MR0175 with Seal	Plug in / DIN connector Wall mounting bracket 2" pipe mounting bracket NACE MR0175 with Seal	Wall mounting bracket 2" pipe mounting bracket

Notes
1. Refer range table for the exact ranges
2. Optional changes extra, contact factory for details
3. Other connections & sizes are available, charges extra, contact factory for details
4. Refer switch table for the switch ratings available

RAJ TECH
www.rajtech-fc.com

APPLICATIONS

- Pump protection from dry run
- Booster pumps, Fire alarm systems
- Air conditioning systems
- Heat exchangers, Water treatment plants
- Constant monitoring of flow
- Digital read-outs in control panels
- Display for the level, pressure and

BASIC MODEL	FS 101
DESCRIPTION	Water Flow Switch, Rugged Design Easy installation and maintenance Economical version Optional flume-proof version
CONTROL TYPE	Paddle / Flapper
RANGE	1"...6" (Applicable line-sizes)
STATIC PRESSURE	9.8 bar...19.6 bar
PROCESS PRESSURE	193 psig / 13.5 bar
STORAGE TEMPERATURE	32°F...100°F
PROCESS TEMPERATURE	32°F...250°F
FLUID TEMPERATURE	212°F (max.)
MICROSWITCH	SPDT (1 NO + 1NC)
ELECTRICAL RATING	220VAC, 15A
CONNECTION	1" NPT (M), in Brass
FLAPPER	Stainless Steel
ENCLOSURE	Plastic with Ni-plated assembly base
COUNDUIT	1/2" BSP(F)
CABLE GLAND	1/2" BSP(M), Ni-plated brass

BASIC MODEL	TT 213
DESCRIPTION	Head Mounted Temp. Transmitter, Economical, Range adjustable, High load capacity, Linear output
INPUT	Pt-100, T/C - B, E, J, K, N, R, S, & T
RANGE	RTD -200...+850°C & T/C -200...+1820°C
OUTPUT	4...20mA
ACCURACY	+/-0.1% of span
LINEARITY	+/-0.1% of span
TEMPERATURE INFLUENCE	+/-0.5 % of span/25 °C / +/-0.2 % of span/50 °F
POWER SUPPLY	12...40VDC (Standard)
OPERATING TEMPERATURE	-40...+85°C / -40...+185°F
RESPONSE TIME	<= 0.1s
ENCLOSURE	ABS
MOUNTING	DIN B-head or larger (PCD : 33 / 36 mm)
ENCLOSURE RATING	IP 20 / IP 10
SENSOR BREAK DETECTION (Selectable)	Upscale = 20.5mA Downscale = 3.9mA
CIRCUIT LIMIT	<=22 Ma

DIGITAL TEMPERATURE GAUGE (Model : DTG)

Display	15mm High 5 Full Digit Seven Segment Customised LCD
Accuracy / Calibration	+/- 0.25% of Full Span / Possible, Password Protected
Wetted PArts	AISI 316 SS
Connection	½" BSP (M) Adjustable Through Full Sensor Length
Enclosure	AISI 304 SS Snap Action Bayonet Type IP 65
Sensor	RTD PT-100 Class A for Range upto 450° & K Type for Range upto 1000°
Sensor Diameter	4 mm / 6mm / 8 mm / 10 mm / 12 mm
Sensor Length	300 mm Standard or As required Upto 10 Meter
Operating Temperature	10°C to 60°C For Enclosure
Instrument Dimensions	4" or 100 mm Dial
Mounting	Direct Bottom, Back, Remote With Cap, Extension, Every Angle
Instrument Weight with battery	650 Grams for Standard Version

APPLICATIONS

- Pump protection from dry run
- Booster pumps, Fire alarm systems
- Air conditioning systems
- Heat exchangers, Water treatment plants
- Constant monitoring of flow
- Digital read-outs in control panels
- All types of Process Industry

LEVEL SWITCHES

Side Mounted Level Switch

Top Mounted Level Switch

Top Mounted Level Switch

Cable Float Switch

BASIC MODEL	LS 101	LS 102	LS 103	LS 304

LEVEL INDICATOR

BASIC MODEL	LG 201	LG 202 / LG 203	LG 204	LG 205

PROCESS INDICATOR

TEMPERATURE CONTROLLER
Fixed Input & Action, Push to Set

PROGRAMMABLE TEMPERATURE CONTROLLER
Double Display / Auto Tune PID

PROGRAMMABLE TEMPERATURE INDICATOR
RS 485 MOD BUS Output

DIGITAL TIME TOTALISER

DIGITAL PRE-SETABLE TIMER
Multi range - Thumbwheel Setting

PROGRAMMABLE TIMER
Universal Range

SCANNER (8 Channel)
With as per RS 485 MOD BUS Connectivity

DIGITAL PROGRAMMABLE COUNTER
Big Display

DIGITAL LENGTH COUNTER

ENERGY METER
3 Phase Panel Meter

RAJTECH STAINLESS STEEL TUBES & FITTINGS

Double Ferrule Compression Type Tube Fittings
(Inch & Metric Sizes Available)

Application : High Pressure tube connections for use in Marine, Offshore and Industrail piping systems with Hydraulic system fluids, Fuel oil, Lubricating oil, Fresh water, Salt water, Sanitary, Gas, Steam and Condensate.

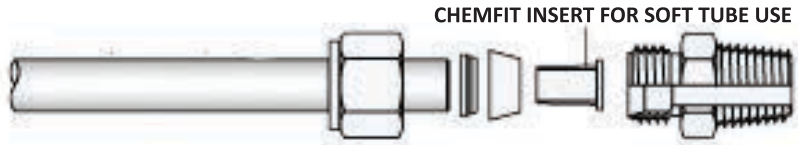

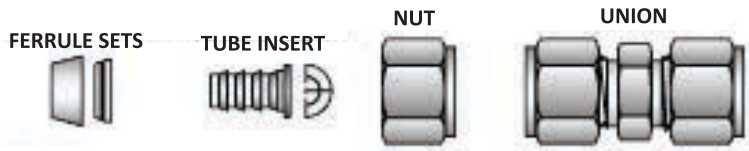

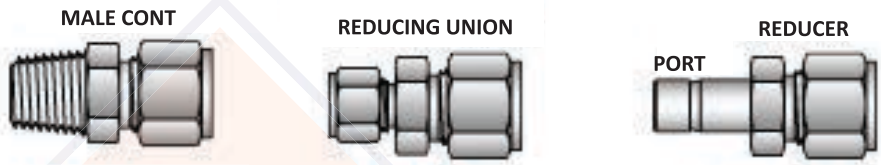

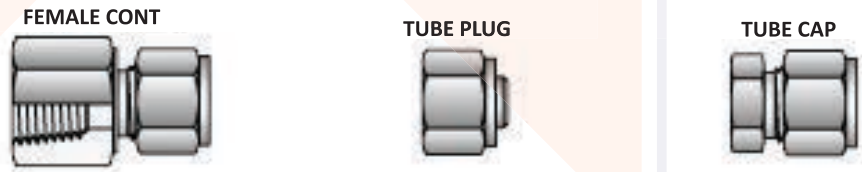

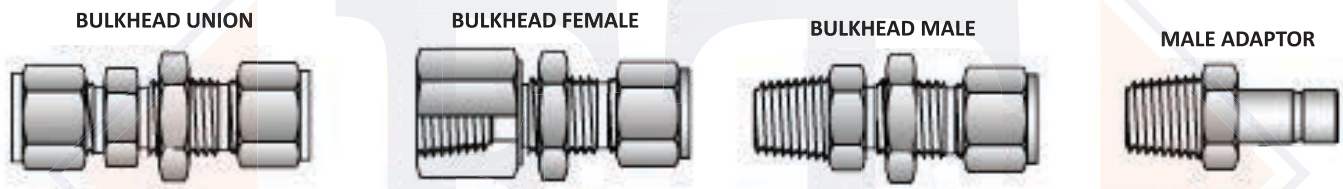

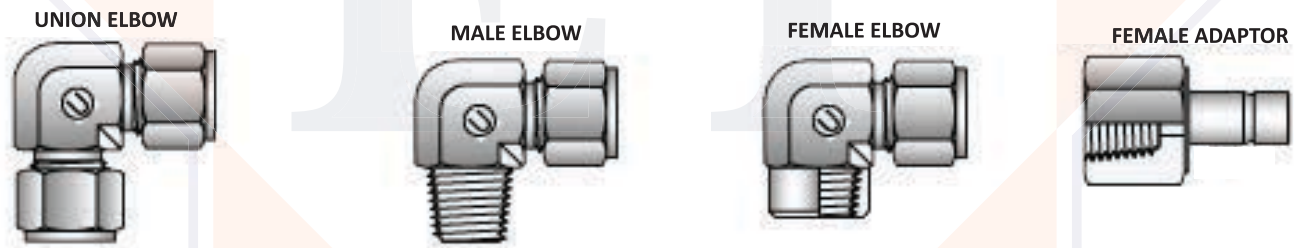

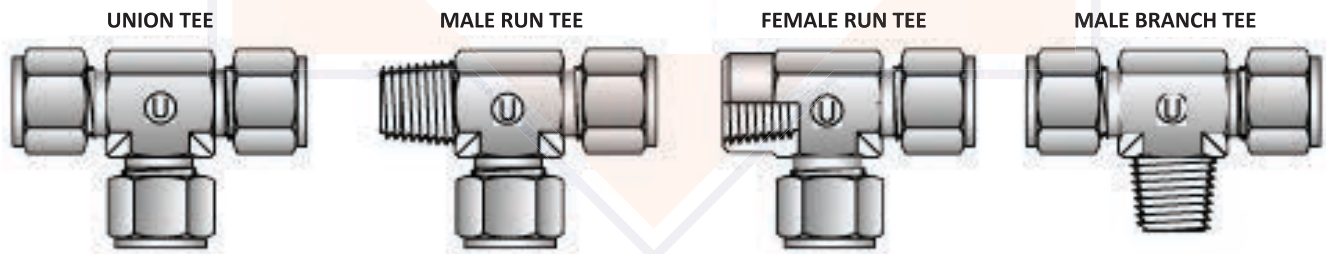

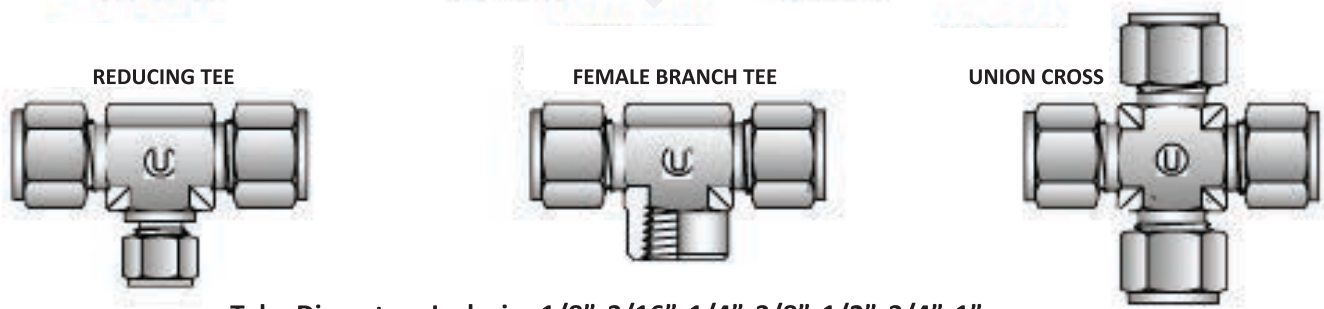

Tube Diameter : Inch size 1/8”, 3/16”, 1/4”, 3/8”, 1/2”, 3/4”, 1”
Metric size : m4, m6, m8, m10, m12, m15, m16, m18, m20, m22, m25
Thread Diameter : 1/8”npt, 1/4”npt, 3/8”npt, 1/2”npt, 3/4”npt, 1”npt

SS316 RELIEF VALVES

SRV Series

FEATURES

- Compact design
- Cracking pressure adjustable externally
- Lock wire feature secures a given pressure setting
- Each and every valve is tested at the factory

SET PRESSURE

- Set pressure is the upstream pressure at which the first indication of flow occurs. Set pressure of each valve after initial relief is repeatable within ± 5% at room temperature.

Model : 5152

Low Pressure Relief Valve

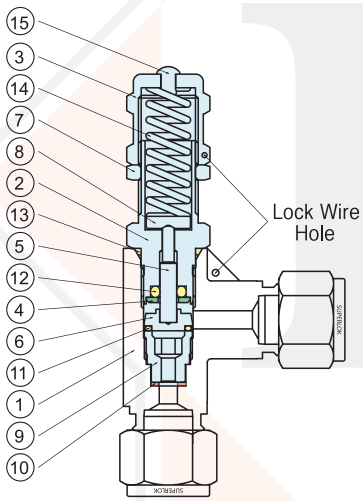

TECHNICAL DATA

- Maximum working pressure : 300 psig (20.6 bar)
- Cracking pressure range : 10~250 psig (0.69~17.2 bar)
- Orifice size : 4.8mm
- One spring for the full set pressure range
- If required spring kit, mention part no : RVL-SG

MATERIALS OF CONSTRUCTION

No.	Description	Material	No.	Description	Material
1	Body	SS 316	9	Seat Retainer	SS 316
2	Bonnet	SS 316	10	Seat	PTFE
3	Cracking Pressure Adjusting Nut	SS 316	11	O-Ring	Viton
4	Retainer	SS 316	12	O-Ring	Viton
5	Stem Shaft	SS 316	13	O-Ring	Viton
6	Stem	SS 316	14	Spring	SS 304
7	Lock Nut	SS 316	15	Cap	Polypropylene
8	Spring Support	SS 316			

Model : 5253

High Pressure Relief Valve

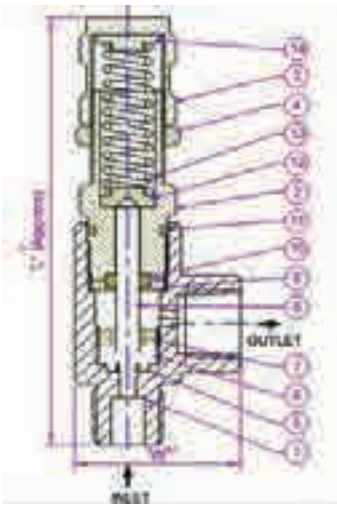

TECHNICAL DATA

- Maximum working Pressure : 6000 psig (413 bar)
- Cracking Pressure Range : 225~6000 psig (15.5~414 bar)
- Orifice size: 4.8mm
- Multiple springs for a selection of set pressure ranges

SRVH Series Spring

Spring Designator	Spring Color	Cracking Pressure		
		psig	bar	kPa
Y	Yellow	225~750	15.5~51.5	1550~5150
P	Purple	750~1500	51.5~103	5150~10300
O	Orange	1500~2250	103~155	10300~15500
B	Brown	2250~3000	155~206	15500~20600
W	White	3000~4000	206~275	20600~27500
R	Red	4000~5000	275~344	27500~34400
G	Green	5000~6000	344~414	34400~41400

If required spring kit, mention part no : RVL - * ex) RVH-Y

MATERIALS OF CONSTRUCTION

No.	Description	Material	No.	Description	Material
1	Body	SS 316	8	Stem	SS 316
2	Bonnet	SS 316	9	Washer	SS 316
3	Cap	SS 316	10	Stem Seal	Viton
4	Lock Nut - 2	SS 316	11	Bonnet Seal	Viton
5	Seat	Viton	12	Spring Washer	SS 316
6	Seat Retainer	SS 316	13	Spring	SS 316
7	Lock Nut - 1	SS 316	14	Spring Washer	SS 316

BRONZE SAFETY VALVES

L3 Sealing 1/2” - 2”

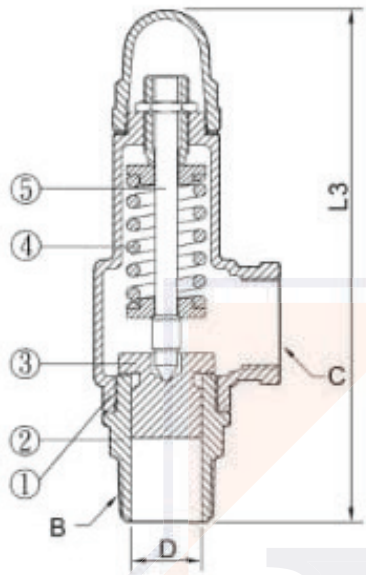

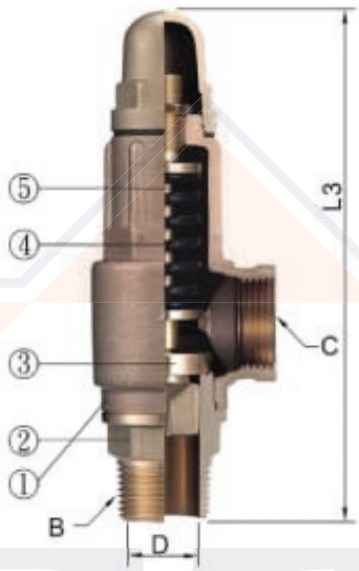

L3 Lever 1/2” - 2”

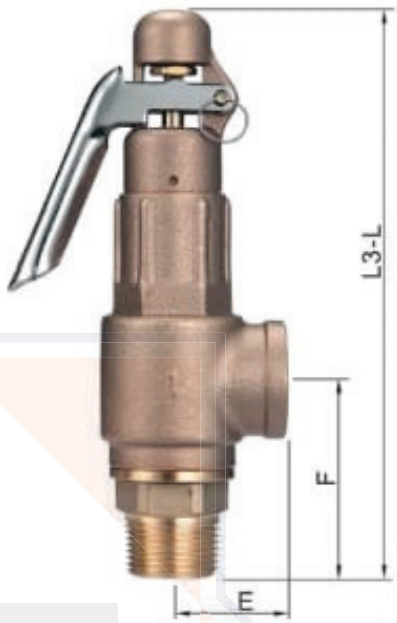

尺寸表 Dimensions

(密閉式 Sealing) 單位 Unit:mm

項目 Item / 尺寸 Size	L3	入口 Inlet B	出口 Outlet C	閥座徑 Valve seat orifice D	E	F	揚程 Lift	重量 Wt. kg
1/2"	138	1/2"	1/2"	13	29	50	0.52	0.52
3/4"	149	3/4"	3/4"	19	36	58	0.76	0.66
1"	181	1"	1"	25	40	70	1.00	1.09
1-1/4"	207	1-1/4"	1-1/4"	32	50	82	1.28	1.90
1-1/2"	231	1-1/2"	1-1/2"	38	54	93	1.52	2.35
2"	266	2"	2"	50	67	102	2.00	3.85

(手拉式 Lever) 單位 Unit:mm

項目 Item / 尺寸 Size	L3-L	重量 Wt. kg
1/2"	161	0.59
3/4"	172	0.74
1"	202	1.19
1-1/4"	222	1.94
1-1/2"	246	2.39
2"	282	4.11

材質表 General Material

序號 NO.	零件 Parts Name / 型式 Model	L3 密閉式 Sealing	L3-L 手拉式 Lever
1	閥體 Valve Body	Cast Bronze 青(砲金)銅	
2	閥座 Valve Seat	Forging Brass (鍛造黃銅)	
3	閥盤 Disc	Forging Brass (鍛造黃銅)	
4	彈簧 Spring	Steel (鋼)	
5	閥桿 Stem	Brass (黃銅)	
使用壓力 Working Pressure		0.3~2 kgf/cm² 2.1~10 kgf/cm²	11~20 kgf/cm²
使用溫度 Working Temp		-45 °C~185 °C	
使用流體 Working Fluid		非腐蝕性氣體、空氣、蒸氣 Noncorrosive Gas、Air、Steam	非腐蝕性氣體、空氣、蒸氣 Noncorrosive Gas、Air、Steam

RAJ TECH
www.exceltech-llc.com

PRESSURE SWITCH

Pressure switch mechanical for refrigeration applications
With settable / fixed differential
Model PSM-690

WIKA data sheet PV 35.04

Applications

- Refrigeration compressors
- Chillers
- Driers
- HVAC

Special features

- Robust mechanism
- Auto or manual reset
- Designed for use in refrigeration systems
- No tools required to adjust the setpoint
- Fail safe double ply bellow element for high pressure

Fig. top: Refrigeration pressure switch, single pressure port, model PSM-690
Fig. bottom: Refrigeration pressure switch, dual pressure port, model PSM-690

Description

The PSM-690 is used in refrigeration control, monitoring and alarm applications.
The switch point can be specified by the customer on site.

The instrument can switch electrical loads of up to AC 230 V, 10 A.

The PSM-690 pressure switch is specially designed for refrigeration applications.

Data sheets showing similar products:
Pressure switch, heavy-duty version, TPST; model PSM-530; see data sheet PV 35.02
Pressure switch, heavy-duty version, for superior industrial applications; model PSM-550; see data sheet PV 35.03

WIKA
Part of your business

RAJ TECH
www.exceltech-llc.com

RT

RAJ TECH

SS316 SAFETY VALVES

BOWLING

BOWLING BRONZE SAFETY VALVE

WIKA

WIKA PRESSURE SWITCH

SS

SS BRAND BRONZE SAFETY VALVE

WIKA

WIKA PRESSURE GAUGES

WEIKE

PRESSURE GAUGES & THERMOMETERS

SANDVIK

SS316 TUBINGS & PIPES

Danfoss

DANFOSS PRESSURE SWITCH

Awaji

STAINLESS STEEL BUTTWELD FITTINGS

excel

INSTRUMENTS

EXCEL PRESSURE GAUGES & THERMOMETERS

EXCEL TECH

Tel : +971 4 2347852
Fax : +971 4 2282486
P.O.Box : 184811
Dubai - U.A.E

+971 50 852 1560
+971 56 114 5526
+971 56 114 5652

murtazapata@yahoo.com
murtaza@exceltech-llc.com
sales@exceltech-llc.com
www.exceltech-llc.com